Drawing Number	Rev #	Drawing Title
C5E-FA1950-A06	Rev. 0	EXTRACTION WELL 234 AND 235 WELL DETAIL
C5E-FA1950-A07	Rev. 0	EW-234 AND EW-235 WELL VAULT DETAIL
C5E-FA1950-A12	Rev. 0	GROUND WATER PIEZOMETER WELLS INSTALLATION DETAILS
C5E-FA1950-A14	Rev. 0	GENERAL OVERALL EXTRACTION WELL AND MONITORING WELL LOCATION PLAN
C7DC7650AA001	Rev. 1	EW-234 WELL 6" Ø HDPE PIPE PLAN AND PROFILE
C7DC7650AA002	Rev. 1	EW-235 INFLUENT 6" Ø HDPE PIPE PLAN AND PROFILE
C7DC7650AA003	Rev. 1	C-765-A EFFLUENT 6" Ø HDPE PIPE PLAN AND PROFILE
C7DC7650AA004	Rev. 1	OVERALL PIPE DETAILS
C7DC7650AA005	Rev. 1	EW-235, EW-234, AND C-765-A PIPE AND INSTALLATION DETAILS
C7DC7650AA008	Rev. 1	C-765-A PAD DESIGN
C7DC7650AA011	Rev. 1	EW-234 ELECTRICAL CONDUIT TO C-765 PLAN AND PROFILE
C7DCWELLSA002	Rev. 0	GROUND WATER MONITORING WELLS TYPICAL WELL DETAILS
C7DCWELLSA003	Rev. 0	GROUND WATER MONITORING WELLS INSTALLATION DETAILS
E7DC7650AA001	Rev. 1	EXTRACTION WELL EW234 ELECTRICAL SITE PLAN
E7DC7650AA002	Rev. 1	EXTRACTION WELL EW-235 ELECTRICAL SITE PLAN
E7DC7650AA003	Rev. 1	C-765-A TREATMENT UNIT ELECTRICAL SITE PLAN
E7DC7650AA004	Rev. 1	ELECTRICAL ONE-LINE DIAGRAM - EXTRACTION WELLS EW-234 AND EW-235
E7DC7650AA005	Rev. 1	ELECTRICAL ONE-LINE DIAGRAM SOUTH TRAILER TREATMENT UNIT #235
E7DC7650AA006	Rev. 1	EW #234 & #235 WELLHEAD RACK ASSEMBLY
E7DC7650AA007	Rev. 1	NE PLUME INTERIM REMEDIAL ACTION OPTIMIZATION TREATMENT TRAILER #235 ELECTRICAL UTILITY DETAILS
E7DC7650AA008	Rev. 1	ELECTRICAL POLE DETAILS
E7DC7650AA009	Rev. 1	ELECTRICAL DETAILS EW #234 & EW #235
E7DC7650AA010	Rev. 1	C-765 480 V SCHEMATICS
E7DC7650AA011	Rev. 1	C-765 120 VAC SCHEMATICS
E7DC7650AA012	Rev. 1	C-765 DISCRETE I/O SCHEMATICS
E7DC7650AA013	Rev. 1	C-765 ANALOG SCHEMATICS
E7DC7650AA014	Rev. 1	C-765-A 480 V SCHEMATIC
E7DC7650AA015	Rev. 1	C-765-A 120 VAC SCHEMATICS
E7DC7650AA016	Rev. 1	C-765-A DISCRETE I/O SCHEMATICS
E7DC7650AA017	Rev. 1	C-765-A ANALOG SCHEMATICS
E7DC7650AA018	Rev. 1	EXTRACTION WELL 234 PANEL 480 V SCHEMATICS (SHEET 1)
E7DC7650AA019	Rev. 1	EXTRACTION WELL 234 PANEL 480 V SCHEMATICS (SHEET 2)
E7DC7650AA020	Rev. 1	EXTRACTION WELL 234 PANEL 480 V SCHEMATICS (SHEET 3)
E7DC7650AA021	Rev. 1	EXTRACTION WELL 234 VFD ENCLOSURE LAYOUT
E7DC7650AA022	Rev. 1	EXTRACTION WELL 235 PANEL 480 V SCHEMATICS (SHEET 1)
E7DC7650AA023	Rev. 1	EXTRACTION WELL 235 PANEL 480 V SCHEMATICS (SHEET 2)
E7DC7650AA024	Rev. 1	EXTRACTION WELL 235 PANEL 480 V SCHEMATICS (SHEET 3)
E7DC7650AA025	Rev. 1	EXTRACTION WELL 235 VFD ENCLOSURE LAYOUT
E7DC7650AA026	Rev. 1	C-765-A HEAT TRACE DETAILS
G7DC7650AA002	Rev. 1	LEGENDS AND ABBREVIATIONS
G7DC7650AA003	Rev. 1	SITE PLAN - EW 235 LINE, EW-234 LINE(S), AND C-765-A
P7DC7650AA001	Rev. 1	PROCESS FLOW DIAGRAM EXTRACTION WELL 234 SYSTEM
P7DC7650AA002	Rev. 1	PROCESS FLOW DIAGRAM EXTRACTION WELL 235 SYSTEM
P7DC7650AA003	Rev. 1	TREATMENT SYSTEM 234 PROCESS AND INSTRUMENTATION DIAGRAM
P7DC7650AA004	Rev. 1	TREATMENT SYSTEM 235 PROCESS AND INSTRUMENTATION DIAGRAM
P7DC7650AA005	Rev. 1	C-765 GENERAL ARRANGEMENT
P7DC7650AA006	Rev. 1	C-765 SILENCER ELEVATION VIEW
P7DC7650AA007	Rev. 1	C-765-A GENERAL ARRANGEMENT
P7DC7650AA008	Rev. 1	C-765-A SILENCER ELEVATION VIEW

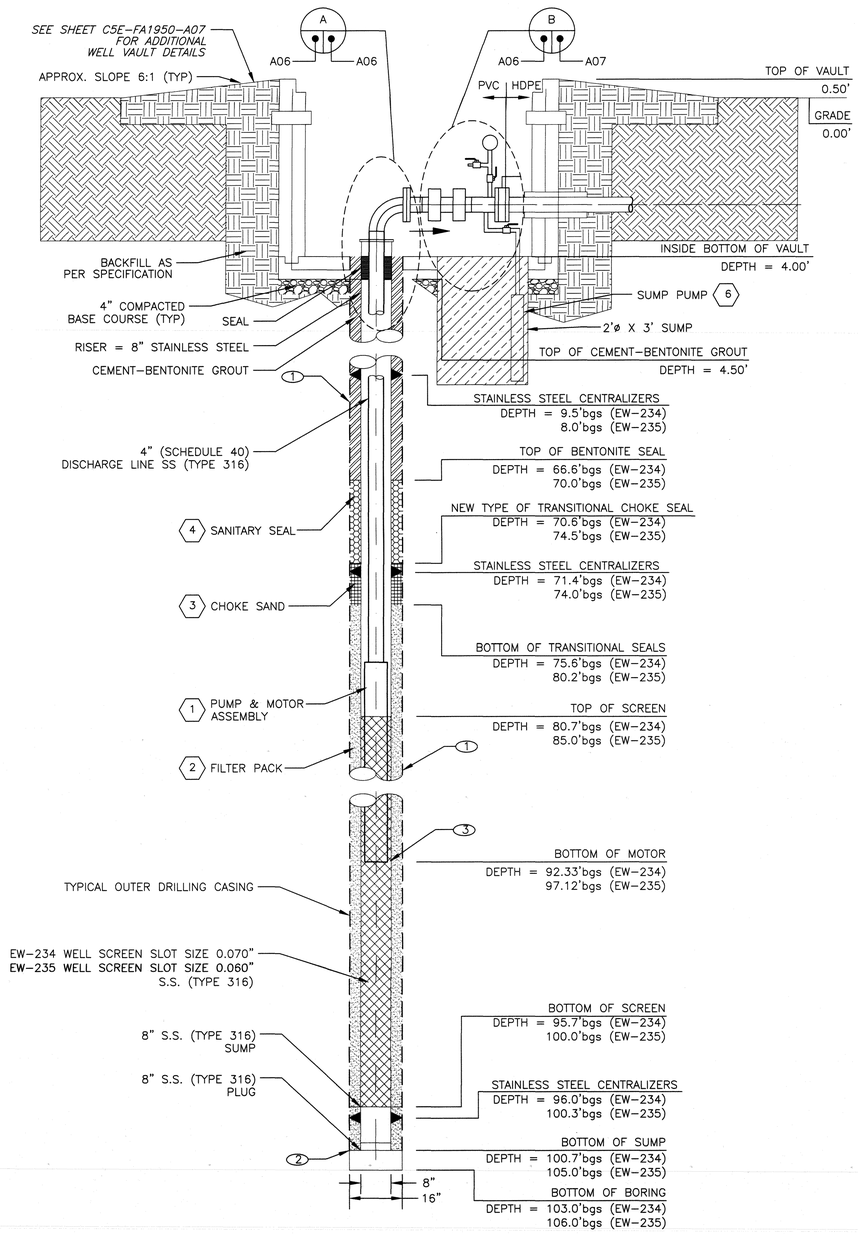

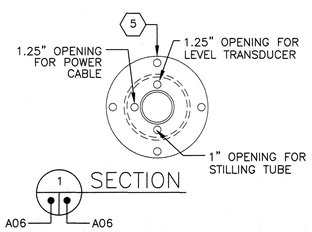

GENERAL NOTES

1. REFERENCE: TECHNICAL SPECIFICATIONS SECTION 33 23 00.
2. WELL CONSTRUCTION SHALL BE PERFORMED ACCORDING TO THE COMMONWEALTH OF KENTUCKY WELL CONSTRUCTION PRACTICES AND STANDARDS 401 KAR 6:310
3. ALL PARTS AS SPECIFIED OR ENGINEERS APPROVED "OR EQUAL".
4. ALL PIPE PENETRATIONS SHALL BE SEALED WITH LINK SEAL OR OTHER APPROPRIATE SEAL.
5. WELL CASING AND SCREEN SHALL BE CENTERED WITHIN BOREHOLE.
6. PUMP ASSEMBLY AND DISCHARGE PIPE SHALL BE HUNG FROM WELL CASING RISER PER MANUFACTURERS RECOMMENDATIONS.
7. WELL RISER SHALL BE A MINIMUM OF 6" HIGH OFF WELL VAULT FLOOR.
8. 2" PIPE WRAP TAPE SHALL BE USED EVERY 6 FT TO SECURE ELECTRICAL WIRING TO THE DISCHARGE PIPE.
9. WELL STILLING TUBE INSTALLED TO THE DEPTH OF 86.5'bgs (EW-234) AND 91.0'bgs (EW-235).
10. WELL INSTALLER SHALL PROVIDE 8' OF EXTRA POWER CABLE LENGTH FOR MAINTENANCE CAPABILITY.
11. WELL VAULT EQUIPPED WITH PRESSURE GAUGE AND SAMPLE PORT.
12. PUMP WIRING SHALL BE 1" CONDUIT. THREE #8 WIRES WITH ONE #10 GROUND.
13. DRILLING CONTRACTOR SHALL TEMPORARILY INSTALL EXTRACTION WELL CASING ABOVE GRADE. AFTER GENERAL CONTRACTOR COMPLETES INSTALLATION OF WELL VAULT, DRILLING CONTRACTOR SHALL COMPLETE INSTALLATION OF WELL AS SHOWN ON THIS DRAWING.
14. INSTALL TWO BRASS PLATE MONUMENTS. CONTRACTOR SHALL STAMP WELL NUMBER, COORDINATES, ELEVATIONS, AND ASSEMBLED KENTUCKY GROUNDWATER DATABASE REGISTRATION NUMBER (MIN. ½" SIZE LETTERS) IN BRASS PLATE. BRASS PLATE SHALL BE DOMED SURVEY MARKER 3" DIA. LIETZNUMBER 8134-18 OR COMPANY ACCEPTED EQUAL.

KEYED NOTES

1. OUTER DRILLING CASING SHALL BE INSTALLED AS TEMPORARY CASING AND SHALL BE REMOVED DURING INSTALLATION OF FILTER PACKS AND SEALS.
2. EW INSTALLATION DEPTHS BASED ON ASSUMED 100' TOTAL DEPTH. ACTUAL DEPTHS WILL BE ADJUSTED BASED ON OFFSET MONITOR WELLS.
3. PUMP DEPTH WILL BE DETERMINED BASED ON STEP TEST DATA.

DESCRIPTION, MATERIAL, VENDOR

1. SUBMERSIBLE PUMP AND MOTOR
   EW 234: 480V, 3 PHASE, 15HP GRUNDFOS MODEL 230S150-4 W/ENVIRONMENTAL RETROFIT
   EW 235: 480V, 3 PHASE, 10HP GRUNDFOS MODEL 150S100-5 W/ENVIRONMENTAL RETROFIT
2. FILTER PACK: EW-234 = #3 SAND (D50=0.185" / D70=0.150")
   EW-235 = #4 SAND (D50=0.095" / D70=0.077")
3. CHOKE SAND 20X40 MESH
4. SANITARY SEAL, BENTONITE *(SEE SPECIFICATION 33 23 00)*
5. WELL HEAD ASSEMBLY, STAINLESS STEEL *(316)*
6. SUMP PUMP AND MOTOR GRUNDFOS 480V, 1/2 HP 7S05-8

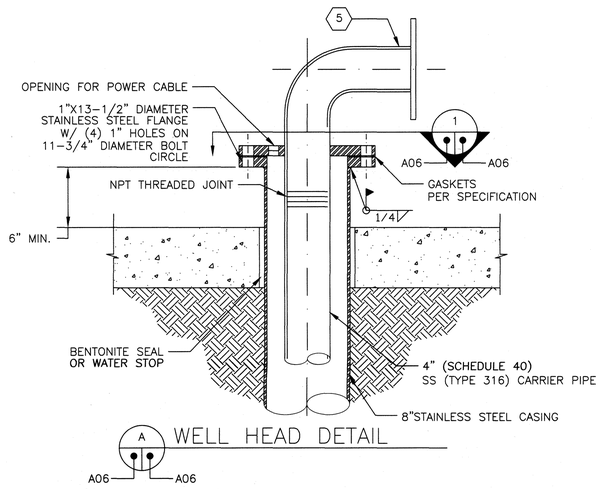

THIS DRAWING PRODUCED ON AUTOCAD
DO NOT REVISE MANUALLY

LPE

STATE OF KENTUCKY
KAREN A. SIZEMORE
21059
LICENSED PROFESSIONAL ENGINEER

Karen A. Sizemore
9/25/17

DATE

PROFESSIONAL SEAL

SECTION NUMBER OR DETAIL LETTER
DRAWING ON WHICH SECTION OR DETAIL IS TAKEN
DRAWING ON WHICH SECTION OR DETAIL IS SHOWN

SECTION AND DETAIL KEY

TOLERANCES UNLESS OTHERWISE SPECIFIED
FRACTIONS ± 1/16"
XX DECIMALS
XXX DECIMALS
ANGLES
BREAK SHARP EDGES MAX.
FINISH

"NO REPRESENTATION OR WARRANTY, EXPRESSED OR IMPLIED, IS MADE THAT THE USE OR DISCLOSURE OF ANY INFORMATION, APPARATUS, METHOD OR PROCESS DISCLOSED IN THESE DRAWINGS MAY NOT INFRINGE PRIVATE RIGHTS OF OTHERS. NO LIABILITY IS ASSUMED WITH RESPECT TO THE USE OF, OR FOR DAMAGES RESULTING FROM THE USE ,ANY INFORMATION, APPARATUS, METHOD OR PROCESS DISCLOSED IN THESE DRAWINGS. THE DRAWINGS ARE BEING MADE FOR INFORMATION TO BIDDER AND ARE NOT TO BE USED FOR OTHER PURPOSES, AND ARE TO BE RETURNED UPON REQUEST OF THE FORWARDING CONTRACTOR."

REV. NO.	ISSUE / REVISION DESCRIPTION	DATE	DRW	CHKR	RE	TR	APPD
0	AS-BUILT ENTIRE DRAWING FOR ESD FA1950	9/25/17	KWJ	JAW	JAW	X	KAS
FA1	CERTIFIED FOR CONSTRUCTION FOR ESD FA1950	X	X	X	X	X	X

REVISION OR ISSUE APPROVALS

DRAWING APPROVALS		DATE
DRW	D.HATTON	3/2/16
CHKR	GARY DUNCAN	3/2/16
RE	GARY DUNCAN	3/2/16
TR	N/A	
APPD	K.SIZEMORE	3/2/16

FLUOR.

PADUCAH DEACTIVATION PROJECT
DOE Prime Contract #DE-DT0007774

EXTRACTION WELL 234 AND 235 WELL DETAIL

PRIORITY 3

SCALE	PLANT	BLDG	FL		CLASS
NOTED	PGDP	N/A	N/A		U

ID		REV
FA1950	C5E-FA1950-A06	0

Sep 21, 2017

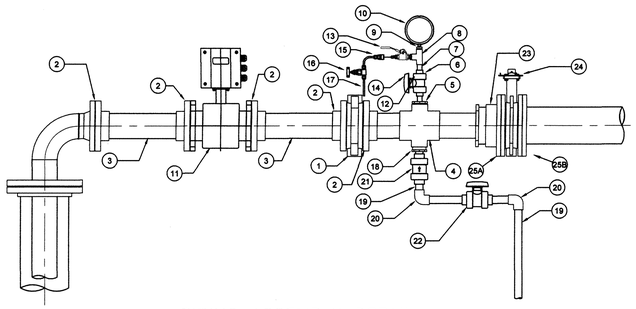

PIPING ASSEMBLY DETAIL

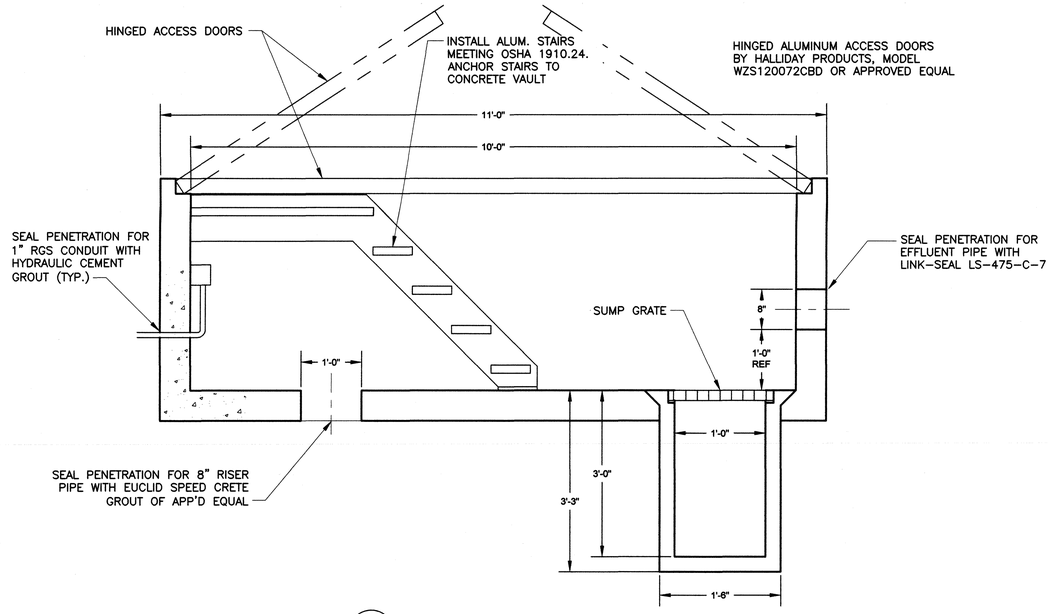

WELL VAULT SECTION
SCALE: 1" = 12"
(SCALE FOR DRAWING FORM 30" X 42")
0 6" 12" 18" 24"
C A07 A07

BILL OF MATERIAL			
ITEM #	QTY.	DESCRIPTION	PART NUMBER
1	1	4" CHECK VALVE, WAFER STYLE SWING CHECK, 150# CLASS, PVC BODY, VITON SEAL	PRAHER VALVES K8 SERIES, P/N 129115
2	5	FLANGE, PVC, 150# CLASS, 4" NOMINAL, SOCKET CONNECTION, GRAY	SPEARS MFG P/N: 851-040 OR EQUAL
3	5	PIPE, PVC, SCH. 80, 4" NOMINAL, GRAY, VARIOUS LENGTHS	SPEARS MFG P/N: PD-800-040 OR EQUAL
4	1	REDUCING CROSS, PVC, SCH. 80, 4" X 4" X 2" BRANCH CONNECTION, GRAY	SPEARS MFG P/N: 820-420 OR EQUAL
5	1	REDUCING BUSHING, PVC, SCH. 80, 2" X ½", GRAY	SPEARS MFG P/N: 837-247 OR EQUAL
6	1	BALL VALVE, PVC, TRUE UNION SOCKET CONNECTIONS, ½" NOMINAL, FKM SEALS	SPEARS MFG P/N: 1839-005 OR EQUAL
7	2	PIPE, PVC, SCH. 80, ½" NOMINAL, GRAY, VARIOUS LENGTHS	SPEARS MFG P/N: PD-800-005 OR EQUAL
8	1	REDUCING TEE, PVC, SCH. 80, ½" SOCKET X ½" SOCKET X ½" NPT BRANCH CONNECTION, GRAY	SPEARS MFG P/N: 802-072SR OR EQUAL
9	1	ADAPTER, PVC, SCH. 80, ½" PIPE STUB TO ½" NPT, GRAY	SPEARS MFG P/N: 878-005SS OR EQUAL
10	1	PRESSURE GAUGE, 0-200 PSIG, ±0.5% SPAN ACCURACY, ½" NPT LOWER CONNECTION, 316 SS SOCKET AND TUBE, 4-½" DIAL	ASHCROFT P/N: 45-1109-SD-04L-XLL-0/200#
11	1	M1000 MAG METER, 4INCH, 150# ANSI FLANGED, PVC BODY, HARD RUBBER LINER, 24VDC, GROUNDING RINGS-316SS	P/N: M10-HR-040-F15-S-AC-MM-XX-VDC-GR
12	1	PIPE NIPPLE, ½" NPT, SEAMLESS, SCH. 40, FULLY THREADED, 316 SS	MCMASTER-CARR P/N: 4548K131 OR EQUAL
13	1	BALL VALVE, FULL PORT, ½" NPT CONNECTIONS, 316 SS BODY, PTFE PACKING	MAS VALVES: ½" G3-SERIES OR EQUAL
14	1	QUICK-CONNECT STEM, 316 SS, ½" MALE NPT	SWAGELOK P/N: SS-QF4-S-4PM OR EQUAL
15	1	QUICK-CONNECT BODY, 316 SS, FKM O-RING, ½" TUBE FITTING CONNECTION	SWAGELOK P/N: SS-QF4-B-400 OR EQUAL
16	1	NEEDLE VALVE,316 SS, PTFE PACKING, ½" TUBE FITTING CONNECTIONS	SWAGELOK P/N: SS-3NBS4 OR EQUAL
17	2	TUBING, 316 SS, ½" ODT, 0.035" WALL THICKNESS, VARIOUS LENGTHS	SWAGELOK P/N: SS-T4-S-035-20 OR EQUAL
18	1	REDUCING BUSHING, PVC, SCH. 80, 2" X 1", GRAY	SPEARS MFG P/N: 837-249 OR EQUAL
19	5	PIPE, PVC, SCH. 80, 1" NOMINAL, GRAY, VARIOUS LENGTHS	SPEARS MFG P/N: PD-800-010 OR EQUAL
20	2	ELBOW, PVC, SCH. 80, 1" NOMINAL, SOCKET CONNECTIONS, GRAY	SPEARS MFG P/N: 806-010 OR EQUAL
21	1	CHECK VALVE, BALL-TYPE, PVC, TRUE UNION SOCKET CONNECTIONS, 1" NOMINAL, FPM SEAT	HAYWARD P/N: TC10100ST OR EQUAL
22	1	BALL VALVE, PVC, TRUE UNION SOCKET CONNECTIONS, 1" NOMINAL, FKM SEALS	SPEARS MFG P/N: 1839-010 OR EQUAL
23	1	REDUCING BUSHING, PVC, SCH. 80, 6" X 4", GRAY	SPEARS MFG P/N: 837-532 OR EQUAL
24	1	BUTTERFLY VALVE, 6" NOMINAL, WAFER STYLE, 200 PSI PRESSURE RATING, VITON O-RING/SEAT, DUCTILE IRON BODY	C&C C200 SERIES VALVE OR EQUAL
25A	1	FLANGE, PVC, 150# CLASS, 6" NOMINAL, SOCKET CONNECTION, GRAY	SPEARS MFG P/N: 851-060 OR EQUAL
25B	1	FLANGE ADAPTER, IPS BEVELED (BFV), 6" SIZE, (ACTUAL O.D. 6.625"), SDR 11, 160 PSI, (8.625"x8.5" LG.)	WOLSELEY P/N PEI11HBFBEVU

NOTE:
ACTUAL QUANTITIES TO BE VERIFIED BY THE INSTALLER. ALTERNATE MATERIALS MAY BE UTILIZED WITH PRIOR ENGINEERING APPROVAL. THIS MATERIAL LIST IS NOT TO BE CONSIDERED ALL INCLUSIVE. PLANNERS SHALL ORDER ADDITIONAL MATERIALS AS REQUIRED.

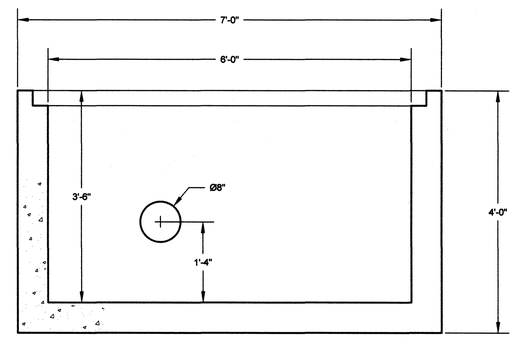

WELL VAULT SECTION
SCALE: 1" = 12"
(SCALE FOR DRAWING FORM 30" X 42")
0 6" 12" 18" 24"
D A07 A07

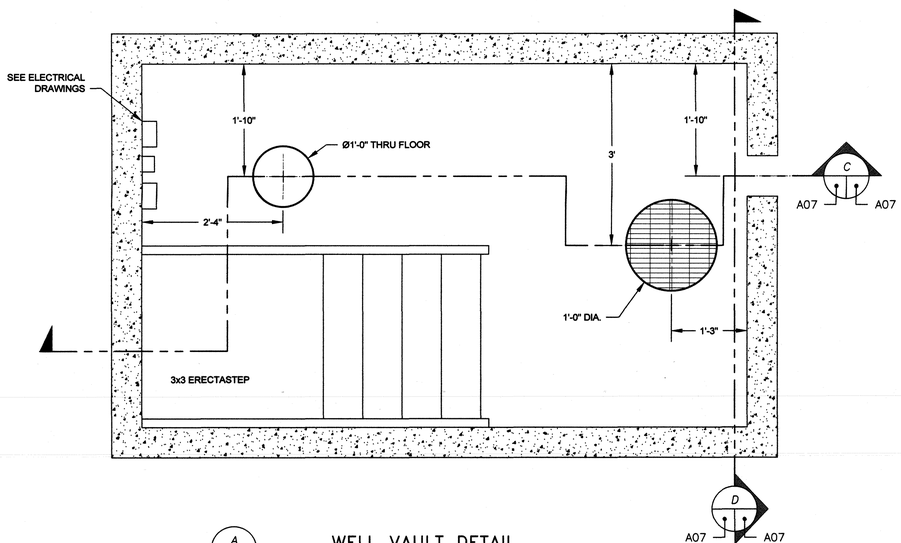

WELL VAULT DETAIL
SCALE: 1" = 12"
(SCALE FOR DRAWING FORM 30" X 42")
0 6" 12" 18" 24"
A A07 A07

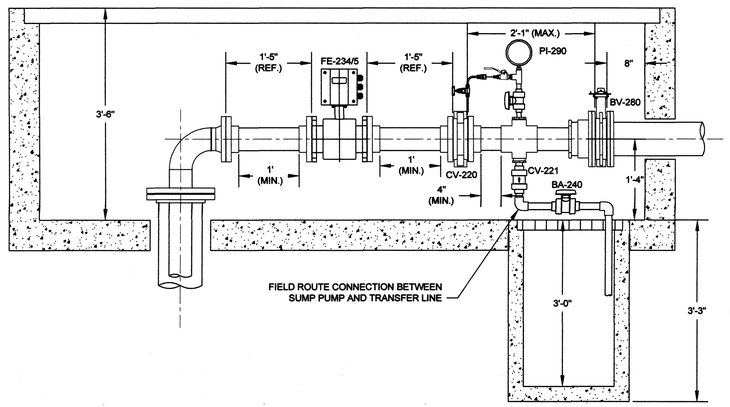

WELL VAULT DETAIL
SCALE: 1" = 12"
(SCALE FOR DRAWING FORM 30" X 42")
0 6" 12" 18" 24"
B A06 A07

GENERAL NOTES

1. EQUIPMENT AND PIPING PARTIALLY OMITTED FROM DRAWING FOR CLARITY.
2. GENERAL CONTRACTOR SHALL PROVIDED SHOP DRAWINGS OF CONCRETE VAULTS, REINFORCEMENT, ACCESS DOORS AND ALUM. STAIRS.
3. CONCRETE SHALL BE IN ACCORDANCE WITH SPECIFICATION 03.00.05.
4. INSTALL 2" THK. FIBERGLASS PIPE INSULATION IN ACCORDANCE WITH TECHNICAL SPECIFICATION 22 07 00 ON ALL EXPOSED WATER PIPING IN THE WELL VAULT NOT INCLUDING THE 1" PIPING BELOW SUMP GRATING. ALUMINUM JACKETING TO BE INSTALLED OVER INSULATION.
5. LABEL ALL VALVES AND INSTRUMENTATION IN ACCORDANCE WITH DRAWINGS AND TECHNICAL SPECIFICATION SECTION 15074, LABELING.

THIS DRAWING PRODUCED ON AUTOCAD
DO NOT REVISE MANUALLY

LPE
STATE OF KENTUCKY KAREN A. SIZEMORE 21059 LICENSED PROFESSIONAL ENGINEER
Karen A. Sizemore 9/25/17
DATE
PROFESSIONAL SEAL

SECTION NUMBER OR DETAIL LETTER
DRAWING ON WHICH SECTION OR DETAIL IS TAKEN
DRAWING ON WHICH SECTION OR DETAIL IS SHOWN
SECTION AND DETAIL KEY

TOLERANCES UNLESS OTHERWISE SPECIFIED
FRACTIONS ± 1/16"
XX DECIMALS
XXX DECIMALS
ANGLES
BREAK SHARP EDGES MAX.
FINISH

"NO REPRESENTATION OR WARRANTY, EXPRESSED OR IMPLIED, IS MADE THAT THE USE OR DISCLOSURE OF ANY INFORMATION, APPARATUS, METHOD OR PROCESS DISCLOSED IN THESE DRAWINGS MAY NOT INFRINGE PRIVATE RIGHTS OF OTHERS. NO LIABILITY IS ASSUMED WITH RESPECT TO THE USE OF, OR FOR DAMAGES RESULTING FROM THE USE ANY INFORMATION, APPARATUS, METHOD OR PROCESS DISCLOSED IN THESE DRAWINGS. THE DRAWINGS ARE BEING MADE FOR INFORMATION TO BIDDER AND ARE NOT TO BE USED FOR OTHER PURPOSES, AND ARE TO BE RETURNED UPON REQUEST OF THE FORWARDING CONTRACTOR."

REV. NO.	ISSUE / REVISION DESCRIPTION	DATE	DRW	CHKR	RE	TR	APPD
0	AS-BUILT ENTIRE DRAWING FOR ESO FA1951, INC. ECR-2017-0003	9/25/17	KTW	JAF	JAF	X	KAS
FA3	CERTIFIED FOR CONSTRUCTION FOR ESO FA1951 PER ECR-2017-0003	X	X	X	X	X	X
FA2	CERTIFIED FOR CONSTRUCTION FOR ESO FA1951	12/12/16	KTW	TAW	TAW	X	KAS
FA1	CERTIFIED FOR CONSTRUCTION FOR ESO FA1950	3/2/16	BP	GWD	GWD	X	KAS

REVISION OR ISSUE APPROVALS

DRAWING APPROVALS		DATE
DRW	R.FLOWERS	5/2/17
CHKR	J.FLEMING	5/2/17
RE	J.FLEMING	5/2/17
TR	N/A	
APPD	K.SIZEMORE	5/3/17

FLUOR.
PADUCAH DEACTIVATION PROJECT
DOE Prime Contract #DE-DT0007774

EW-234 AND EW-235 WELL VAULT DETAIL

PRIORITY 3

SCALE	PLANT	BLDG	FL		CLASS
NOTED	PGDP	N/A	N/A		U

ID FA1950 — C5E-FA1950-A07 — REV 0

C5E-FA1950-A07

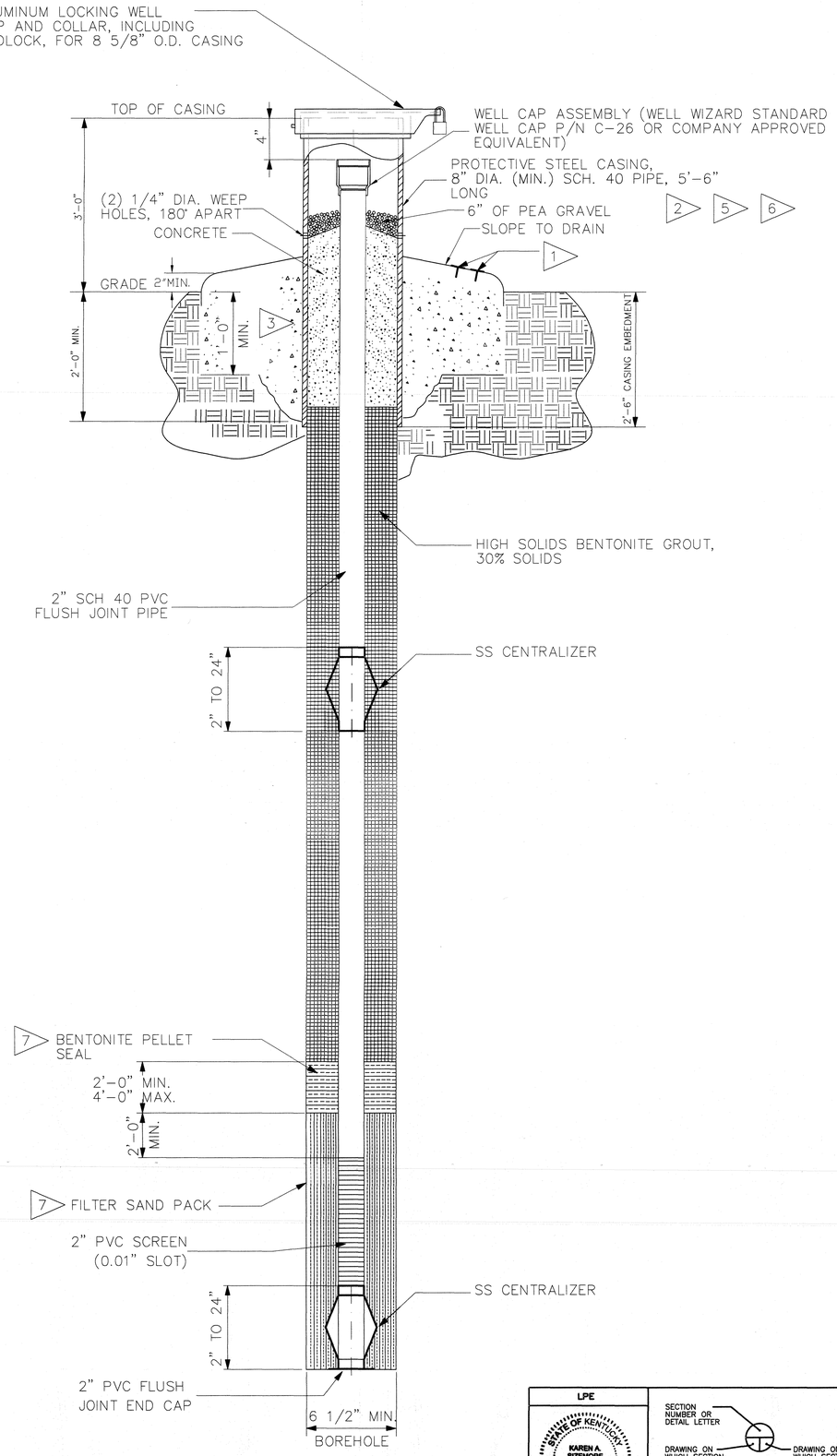

GENERAL NOTES:

1. INSTALL TWO BRASS PLATE MONUMENTS. CONTRACTOR SHALL STAMP WELL NUMBER, COORDINATES, ELEVATIONS, AND ASSEMBLED KENTUCKY GROUNDWATER DATABASE REGISTRATION NUMBER (MIN. ½" SIZE LETTERS) IN BRASS PLATE. BRASS PLATE SHALL BE DOMED SURVEY MARKER 3" DIA. LIETZNUMBER 8134-18 OR COMPANY ACCEPTED EQUAL.
2. PROTECTIVE CASING SHALL BE CLEANED ACCORDING TO SSPC-SP6 AND PRIMED WITH TNEMEC SERIES 37 @ 3-5 MILS AND FINISHED WITH TNEMEC SERIES 82 @ 2-3 MILS, OR COMPANY ACCEPTED EQUAL.
3. CONCRETE FOR PAD FOR PROTECTIVE WELL CASINGS SHALL BE MIN. 2500 PSI @ 28 DAYS.
4. FIELD INSTALL SPACERS ON PADLOCK SHACKLE AS REQ,D. TO MINIMIZE CAP OPENING ACCESS. PADLOCKS AND SPACERS SHALL BE SUPPLIED BY THE COMPANY.
5. EACH PROTECTIVE CASING SHALL BE LABELED WITH BLACK LETTERS. LABEL SHALL INCLUDE THE PREFIX PZ FOR PIEZOMETERS AND THE NUMBER ASSIGNED BY THE COMPANY. LETTERS SHALL BE A MINIMUM OF 3 INCHES HIGH.
6. CASING COLOR – BRIGHT SAFETY YELLOW
7. TYPICAL UPPER CONTINENTAL RECHARGE SYSTEM (UCRS) PIEZOMETER WELL COMPLETION AS SHOWN. SAND PACK FOR RGA PIEZOMETER WELL SHALL EXTEND 2FT INTO THE BASE OF THE UCRS PRIOR TO INSTALLATION OF BENTONITE SEAL.

THIS DRAWING PRODUCED ON AUTOCAD
DO NOT REVISE MANUALLY

LPE

STATE OF KENTUCKY — KAREN A. SIZEMORE — 21059 — LICENSED PROFESSIONAL ENGINEER

Karen A. Sizemore 9/25/17

DATE

PROFESSIONAL SEAL

SECTION NUMBER OR DETAIL LETTER
DRAWING ON WHICH SECTION OR DETAIL IS TAKEN
DRAWING ON WHICH SECTION OR DETAIL IS SHOWN

SECTION AND DETAIL KEY

TOLERANCES UNLESS OTHERWISE SPECIFIED
FRACTIONS ± 1/16"
XX DECIMALS
XXX DECIMALS
ANGLES
BREAK SHARP EDGES MAX.
FINISH

"NO REPRESENTATION OR WARRANTY, EXPRESSED OR IMPLIED, IS MADE THAT THE USE OR DISCLOSURE OF ANY INFORMATION, APPARATUS, METHOD OR PROCESS DISCLOSED IN THESE DRAWINGS MAY NOT INFRINGE PRIVATE RIGHTS OF OTHERS. NO LIABILITY IS ASSUMED WITH RESPECT TO THE USE OF, OR FOR DAMAGES RESULTING FROM THE USE, ANY INFORMATION, APPARATUS, METHOD OR PROCESS DISCLOSED IN THESE DRAWINGS. THE DRAWINGS ARE BEING MADE FOR INFORMATION TO BIDDER AND ARE NOT TO BE USED FOR OTHER PURPOSES, AND ARE TO BE RETURNED UPON REQUEST OF THE FORWARDING CONTRACTOR."

REV. NO.	ISSUE / REVISION DESCRIPTION	DATE	DRW	CHKR	RE	TR	APPD
0	AS-BUILT ENTIRE DRAWING FOR ESD FA1950	9/25/17	KWD	DAW	DAW	X	KAS
FA1	CERTIFIED FOR CONSTRUCTION FOR ESD FA1950	X	X	X	X	X	X

REVISION OR ISSUE APPROVALS

DRAWING APPROVALS		DATE
DRW	D.HATTON	3/2/16
CHKR	G.DUNCAN	3/2/16
RE	G.DUNCAN	3/2/16
TR	N/A	
APPD	K.SIZEMORE	3/2/16

FLUOR. PADUCAH DEACTIVATION PROJECT
DOE Prime Contract #DE-DT0007774

GROUND WATER PIEZOMETER WELLS INSTALLATION DETAILS

PRIORITY 3

SCALE	PLANT	BLDG	FL	CLASS
NONE	PGDP	N/A	N/A	U

ID FA1950 — C5E-FA1950-A12 — REV 0

Sep 13, 2017

NOTES:

1. IT IS THE RESPONSIBILITY OF THE SUBCONTRACTOR TO ENSURE THEIR DRILLING EQUIPMENT IS ADEQUATELY SUPPORTED WHILE ACCESSING AND INSTALLING WELLS. ANY TEMPORARY ACCESS ROADS OR PADS CONSTRUCTED THE SUBCONTRACTOR SHALL MEET THE REQUIREMENTS OF SPECIFICATION SECTION 01 55 13 TEMPORARY ACCESS ROADS AND PADS. THE SUBCONTRACTOR IS RESPONSIBLE FOR ALL COST ASSOCIATED WITH THE RECOVERY OF STUCK EQUIPMENT, INCLUDING ANY CONTRACTOR INCURRED COSTS.
2. GRAVEL ACCESS ROADS TO WELL SITES SHALL BE ROUTED GENERALLY AS SHOWN. FIELD ADJUST AS REQUIRED WITH CONCURRENCE OF CONTRACTOR. DOCUMENT CHANGES ON "RED-LINE" SET OF DRAWINGS.
3. CLEAR AREAS TO RECEIVE GRAVEL ACCESS ROADS IN ACCORDANCE WITH SPECIFICATION SECTION 31 10 00 SITE CLEARING. MOW/BUSH HOG AREAS GRASS AREAS TO RECEIVE GRAVEL ROADS AS REQUIRED.
4. GRAVEL ACCESS ROADS SHALL BE CONSTRUCTED AS FOLLOWS:
   - GEOTEXTILE FABRIC IN ACCORDANCE WITH SPECIFICATION SECTION 31 05 19, GEOSYNTHETICS FOR EARTHWORK.
   - MIN. 6 INCHES THICK, COMPACTED DGA IN ACCORDANCE WITH SPECIFICATION SECTION 32 11 24, DENSE GRADE AGGREGATE (DGA) AND CRUSHED STONE BASE (CSB).
   - MIN. 12 FEET WIDE; MAX. 14 FEET WIDE
5. CULVERTS SHALL BE 16 GAGE (MIN.) ALUMINIZED TYPE 2, CORRUGATED (1/2") STEEL PIPE LAID DIRECTLY ON GRADE IN EXISTING DRAINAGE FLOW LINES AS SHOWN IN PLAN. NO EXCAVATION IS REQUIRED. BUILD UP ROAD MATERIAL AS NECESSARY TO PROVIDE A SMOOTH TRANSITION OVER NEW CULVERT.

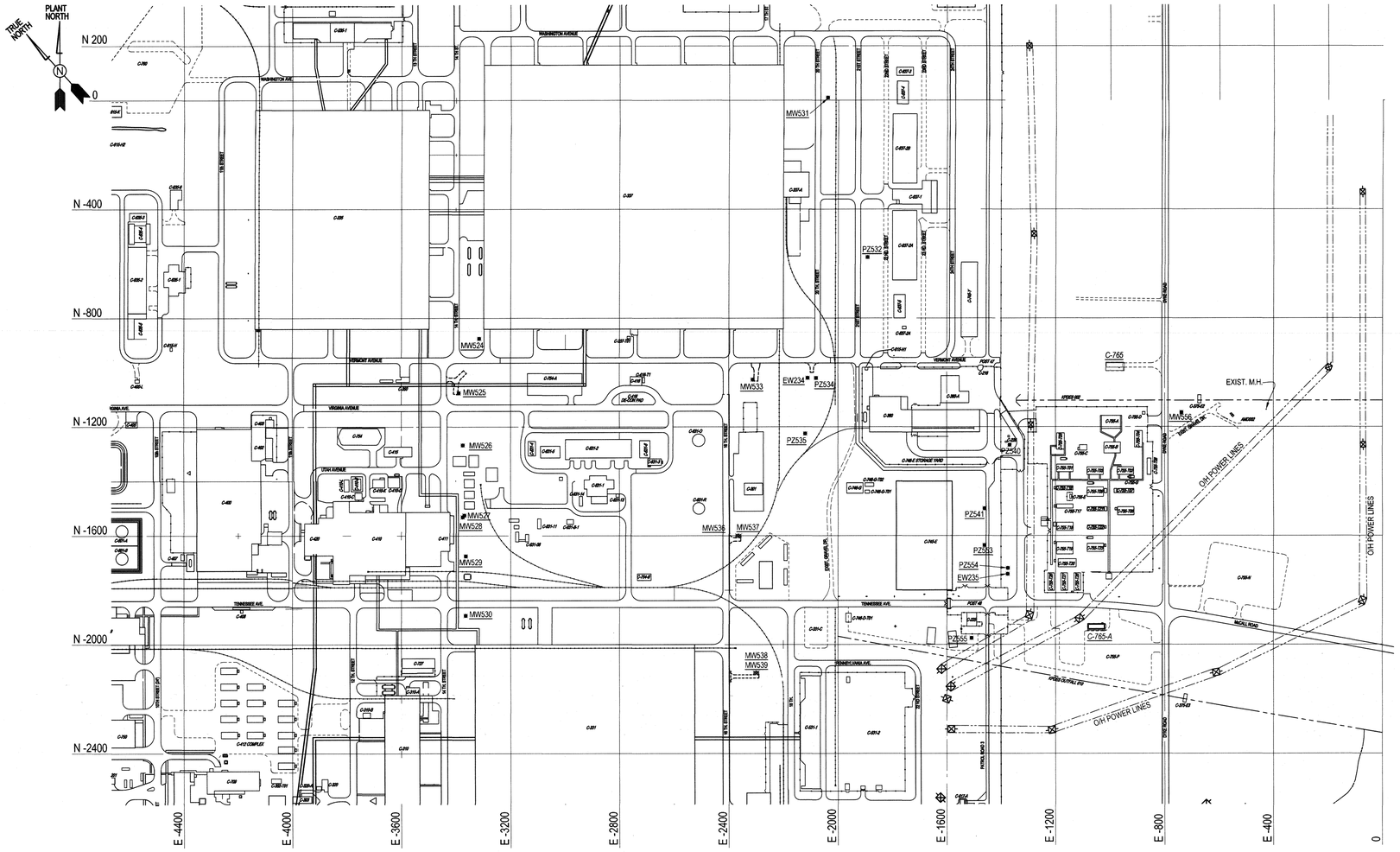

MONITORING WELL LOCATION PLAN

GRAPHIC SCALE: 0 100' 200' 300'

WELL COORDINATE TABLE

Description	Northing	Easting
EW 234	-1019.850	-2110.675
EW 235	-1740.887	-1375.348
MW 524	-874.953	-3314.770
MW 525	-1075.110	-3389.270
MW 526	-1266.960	-3373.911
MW 527	-1525.322	-3369.590
MW 528	-1531.836	-3375.712
MW 529	-1675.126	-3364.049
MW 530	-1893.375	-3364.710
MW 531	9.633	-2038.944
MW 533	-1026.160	-2312.445
MW 536	-1598.954	-2370.020
MW 537	-1599.480	-2359.667
MW 538	-2102.730	-2304.681
MW 539	-2102.562	-2295.121
MW 556	-1146.840	-738.347
PZ 532	-576.080	-1892.665
PZ 534	-1020.020	-2080.020
PZ 535	-1224.765	-2119.753
PZ 540	-1266.184	-1367.833
PZ 541	-1500.544	-1460.671
PZ 553	-1635.596	-1460.861
PZ 554	-1719.248	-1374.820
PZ 555	-1976.650	-1508.320

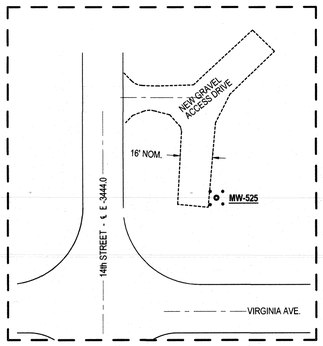

MW525 ACCESS ROAD DETAIL

GRAPHIC SCALE: 0 30' 60'

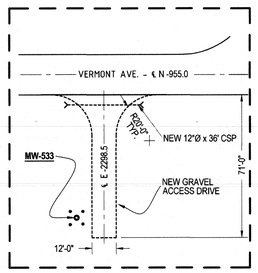

MW533 ACCESS ROAD DETAIL

GRAPHIC SCALE: 0 30' 60'

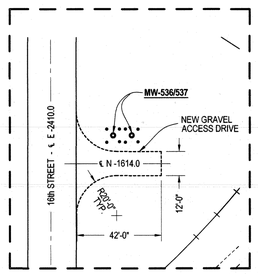

MW536/537 ACCESS ROAD DETAIL

GRAPHIC SCALE: 0 30' 60'

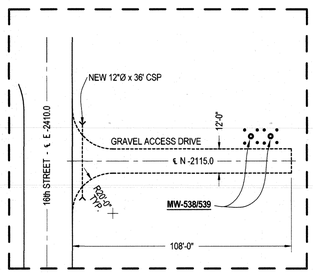

MW538/539 ACCESS ROAD DETAIL

GRAPHIC SCALE: 0 30' 60'

REFERENCE DRAWINGS	DRAWING NO.
EXTRACTION WELL 234 AND 235 WELL DETAIL	C5E-FA1950-A06
GROUND WATER PIEZOMETER WELLS INSTALLATION DETAILS	C5E-FA1950-A12
GROUND WATER MONITORING WELLS INSTALLATION DETAILS	C7DCWELLSA003
GROUND WATER MONITORING WELLS TYPICAL WELL DETAILS	C7DCWELLSA002

THIS DRAWING PRODUCED ON AUTOCAD
DO NOT REVISE MANUALLY

LPE

STATE OF KENTUCKY
KAREN A. SIZEMORE
21059
LICENSED PROFESSIONAL ENGINEER

Karen A. Sizemore
9/25/17

DATE
PROFESSIONAL SEAL

SECTION NUMBER OR DETAIL LETTER
DRAWING ON WHICH SECTION OR DETAIL IS TAKEN
DRAWING ON WHICH SECTION OR DETAIL IS SHOWN
SECTION AND DETAIL KEY

TOLERANCES UNLESS OTHERWISE SPECIFIED
FRACTIONS ± 1/16"
XX DECIMALS
XXX DECIMALS
ANGLES
BREAK SHARP EDGES MAX.
FINISH

"NO REPRESENTATION OR WARRANTY, EXPRESSED OR IMPLIED, IS MADE THAT THE USE OR DISCLOSURE OF ANY INFORMATION, APPARATUS, METHOD OR PROCESS DISCLOSED IN THESE DRAWINGS MAY NOT INFRINGE PRIVATE RIGHTS OF OTHERS. NO LIABILITY IS ASSUMED WITH RESPECT TO THE USE OF, OR FOR DAMAGES RESULTING FROM THE USE, ANY INFORMATION, APPARATUS, METHOD OR PROCESS DISCLOSED IN THESE DRAWINGS. THE DRAWINGS ARE BEING MADE FOR INFORMATION TO BIDDER AND ARE NOT TO BE USED FOR OTHER PURPOSES, AND ARE TO BE RETURNED UPON REQUEST OF THE FORWARDING CONTRACTOR."

REV. NO.	ISSUE / REVISION DESCRIPTION	DATE	DRW	CHKR	RE	TR	APPD
0	ASBUILT ENTIRE DRAWING FOR ESD FA1950	9/25/17	KTW	JAW	JAW	X	KAS
FA1	CERTIFIED FOR CONSTRUCTION FOR ESD FA1950	X	X	X	X	X	X

REVISION OR ISSUE APPROVALS

DRAWING APPROVALS		DATE
DRW	D.HATTON	3/2/16
CHKR	G.DUNCAN	3/2/16
RE	G.DUNCAN	3/2/16
TR	N/A	
APPD	K.SIZEMORE	3/2/16

FLUOR.

PADUCAH DEACTIVATION PROJECT
DOE Prime Contract #DE-DT0007774

GENERAL OVERALL EXTRACTION WELL AND MONITORING WELL LOCATION PLAN

PRIORITY 3

SCALE	PLANT	BLDG	FL	CLASS
NOTED	PGDP	N/A	N/A	U

ID FA1950 — C5E-FA1950-A14 — REV 0

C5E-FA1950-A14

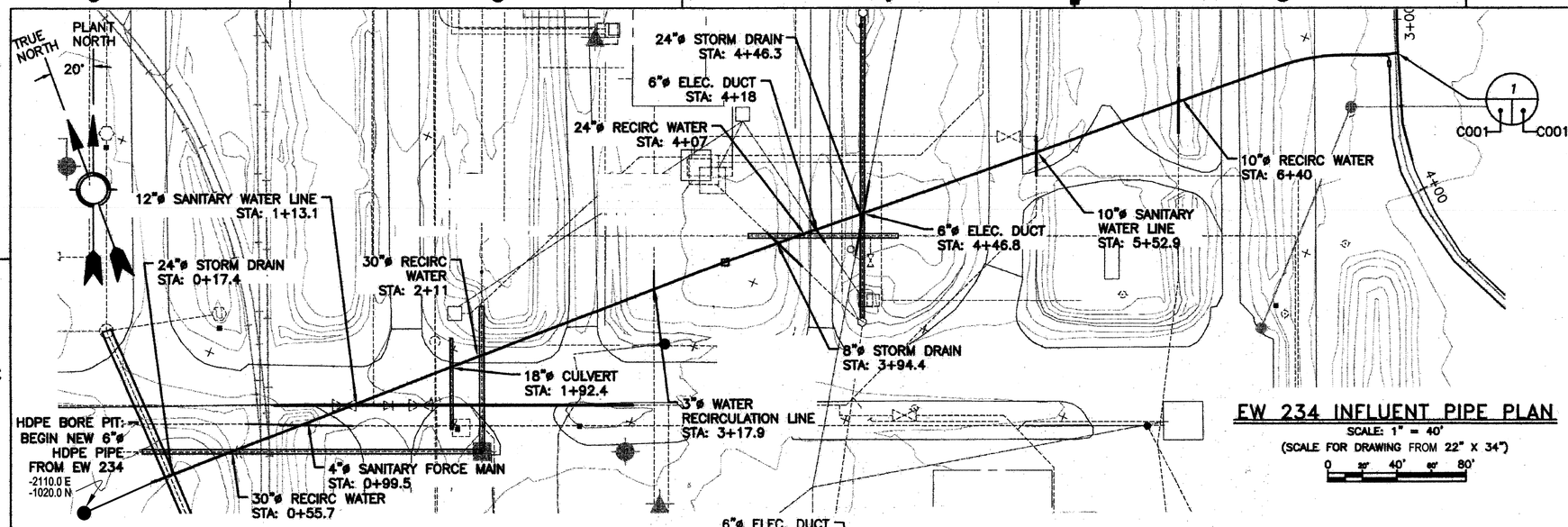

EW 234 INFLUENT PIPE PLAN

SCALE: 1" = 40'
(SCALE FOR DRAWING FROM 22" X 34")
0 20' 40' 60' 80'

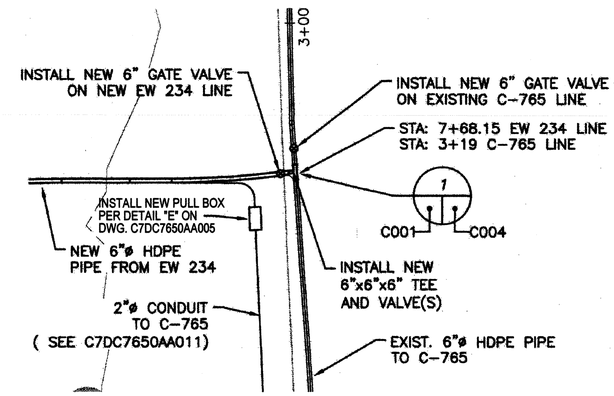

EW 234 6"ø INFLUENT LINE TIE-IN TO EXISTING 6"ø C-765 INFLUENT LINE

C001 C001

SCALE: 1" = 20'
(SCALE FOR DRAWING FROM 22" X 34")
0 10' 20' 30' 40'

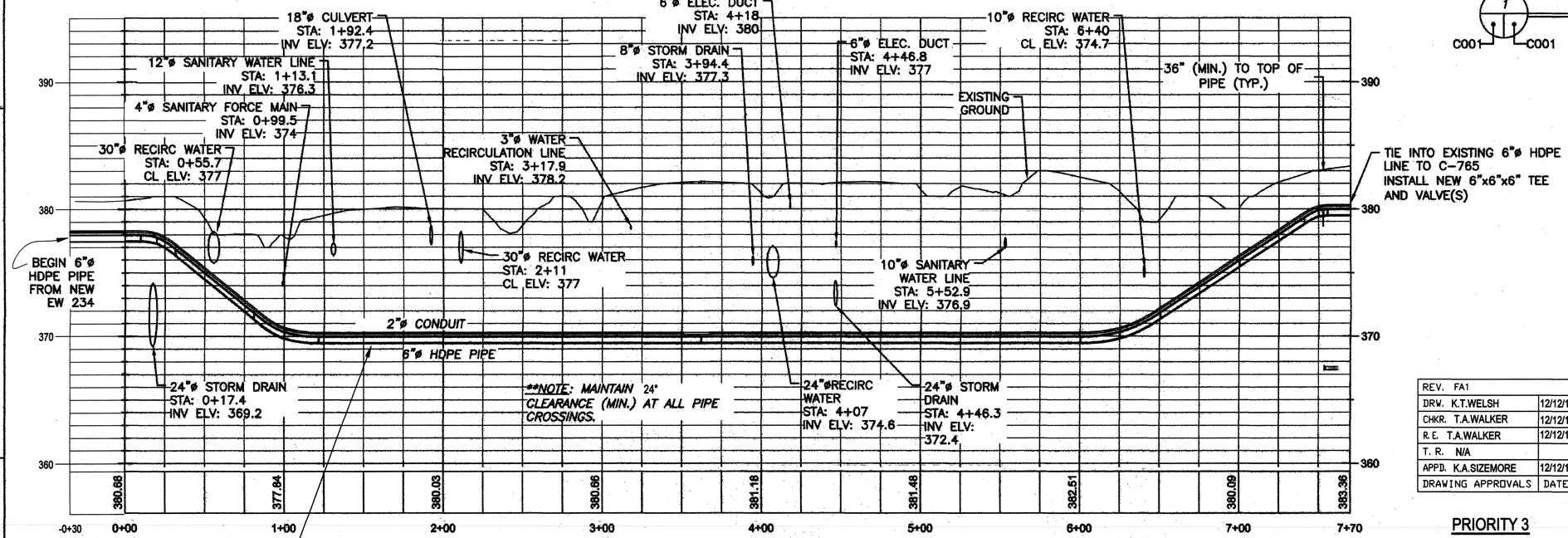

BE AWARE THE ELEVATION INDICATED IS A NOMINAL LOCATION. A TRACE WIRE IS ROUTED ALONG THIS PIPE.

EW 234 INFLUENT PIPE PROFILE

SCALE: 1" = 40' HORZ. : 1" = 5' VERT.
(SCALE FOR DRAWING FROM 22" X 34")
0 20' 40' 60' 80'

REV.	FA1	
DRW.	K.T.WELSH	12/12/16
CHKR.	T.A.WALKER	12/12/16
R.E.	T.A.WALKER	12/12/16
T. R.	N/A	
APPD.	K.A.SIZEMORE	12/12/16
DRAWING APPROVALS		DATE

REV	DRW	CHKR	RE	TR	APPD	DATE
1	KTW	TAW	TAW	X	KAS	10/2/17

PRIORITY 3

FLUOR. PADUCAH DEACTIVATION PROJECT
DOE Prime Contract #DE-DT0007774

U.S. DEPARTMENT OF ENERGY
PADUCAH, PORTSMOUTH PROJECT OPERATIONS,
PADUCAH GASEOUS DIFFUSION PLANT

LATA Environmental Services of Kentucky, LLC — managed for the DEPARTMENT OF ENERGY under U.S. GOVERNMENT contract DE-AC30-10CC40020 Paducah, Kentucky

DOE CONTRACT NO. DE-AC30-10CC40020

PROJECT NAME:
NE PLUME OPTIMIZATION

TITLE:
EW 234 WELL
6"ø HDPE PIPE PLAN & PROFILE

EDCS CAD FILENAME	BUILDING	PLANT	CLASS
C7DC7650AA001rev1.dwg	C-765	PDGP	U

SCALE:	DRAWING NUMBER	REV
N/A	C7DC7650AA001	1

LPE

STATE OF KENTUCKY — KAREN A. SIZEMORE 21059 — LICENSED PROFESSIONAL ENGINEER

10/2/17

DATE:
PROFESSIONAL SEAL

REV.	DATE	DESCRIPTION	DRAWN BY	REVIEW CHK	CHECK CHKR	LEAD ENGR	COMP CONC/ HAZ. SFTY	FAC MGR	ENGR MGR
1	X	AS-BUILT ENTIRE DRAWING FOR ESO FA1951	X	X	X	X	X	X	X
FA1	X	CERTIFIED FOR CONSTRUCTION FOR ESO FA1951	X	X	X	X	X	X	X
0	11/26/13	ISSUED FOR CONSTRUCTION	KCS	TP	MK	TP	TAT	KAS	KAS

DRAWING REVISIONS

"NO REPRESENTATION OR WARRANTY, EXPRESSED OR IMPLIED, IS MADE THAT THE USE OR DISCLOSURE OF ANY INFORMATION, APPARATUS, METHOD OR PROCESS DISCLOSED IN THESE DRAWINGS MAY NOT INFRINGE PRIVATE RIGHTS OF OTHERS. NO LIABILITY IS ASSUMED WITH RESPECT TO THE USE OF, OR FOR DAMAGES RESULTING FROM THE USE, ANY INFORMATION, APPARATUS, METHOD OR PROCESS DISCLOSED IN THESE DRAWINGS. THE DRAWINGS ARE BEING MADE FOR INFORMATION TO BIDDERS AND ARE NOT TO BE USED FOR OTHER PURPOSES, AND ARE TO BE RETURNED UPON REQUEST OF THE FORWARDING CONTRACTOR."

SECTION NUMBER OR DETAIL LETTER
DRAWING ON WHICH SECTION OR DETAIL IS TAKEN
DRAWING ON WHICH SECTION OR DETAIL IS SHOWN
SECTION AND DETAIL KEY

P:\LATA ENVIRONMENTAL SERVICES OF KENTUCKY\111105.07 NE PLUME 2013 DESIGN\DRAFTING- GIS\CADD\03-CIVIL\05 - C7DC7650AA001 - EW234 PP.DWG

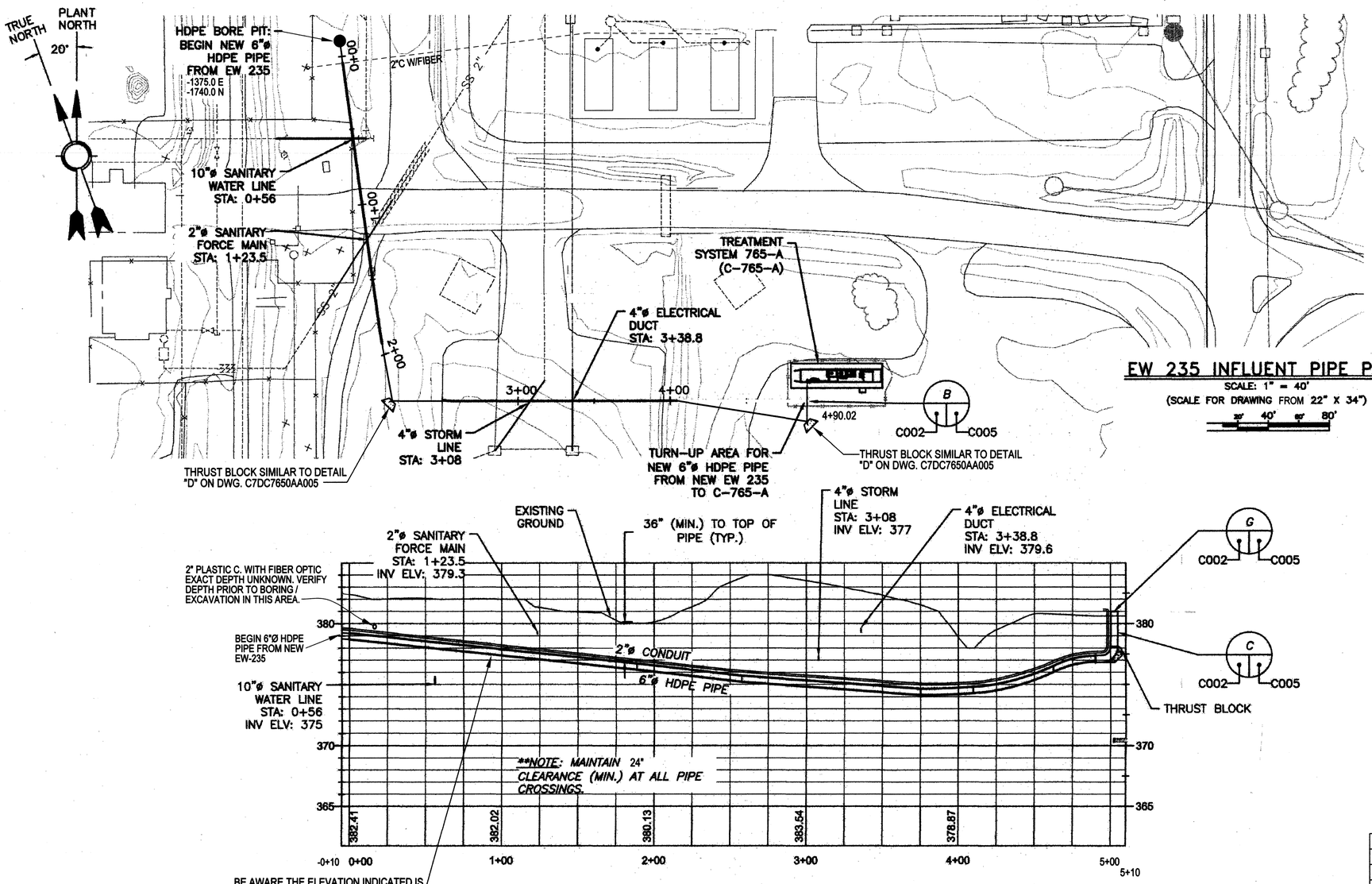

EW 235 INFLUENT PIPE PLAN

SCALE: 1" = 40'
(SCALE FOR DRAWING FROM 22" X 34")
20' 40' 60' 80'

EW 235 INFLUENT PIPE PROFILE

SCALE: 1" = 40' HORZ. : 1" = 5' VERT.
(SCALE FOR DRAWING FROM 22" X 34")
0 20' 40' 60' 80'

PRIORITY 3

REV.	DRW	CHKR	RE	TR	APPD	DATE
1	KTW	JAW	JAW	X	KAS	10/2/17

REV. FA1	
DRW. K.T.WELSH	12/8/16
CHKR. T.A.WALKER	12/9/16
R.E. T.A.WALKER	12/9/16
T. R. N/A	
APPD. K.A.SIZEMORE	12/12/16
DRAWING APPROVALS	DATE

LPE

STATE OF KENTUCKY
KAREN A. SIZEMORE
21059
LICENSED PROFESSIONAL ENGINEER

10/2/17

DATE:

PROFESSIONAL SEAL

REV.	DATE	DESCRIPTION	DRAWN BY	DRAWN CHK	ENGR RVWR	LEAD ENGR	CONC CHK / NUCL SFTY	CHG MGR	DATA MGR
1	X	AS-BUILT ENTIRE DRAWING FOR ESO FA1951	X	X	X	X	X	X	X
FA1	X	CERTIFIED FOR CONSTRUCTION FOR ESO FA1951	X	X	X	X	X	X	X
0	11/26/13	ISSUED FOR CONSTRUCTION	KCS	JAW	RAK	TR	KAS	JAW	KAS

DRAWING REVISIONS

FLUOR. PADUCAH DEACTIVATION PROJECT
DOE Prime Contract #DE-DT0007774

U.S. DEPARTMENT OF ENERGY
PADUCAH, PORTSMOUTH PROJECT OPERATIONS,
PADUCAH GASEOUS DIFFUSION PLANT

LATA Environmental Services of Kentucky, LLC managed for the DEPARTMENT OF ENERGY under U.S. GOVERNMENT contract DE-AC30-10CC40020
Paducah, Kentucky

DOE CONTRACT NO. DE-AC30-10CC40020

PROJECT NAME:
NE PLUME OPTIMIZATION

TITLE:
EW 235 INFLUENT
6"ø HDPE PLAN AND PROFILE

EDCS CAD FILENAME	BUILDING	PLANT	CLASS
C7DC7650AA002rev1.dwg	C-765-A	PDGP	U

SCALE:	DRAWING NUMBER	REV
N/A	C7DC7650AA002	1

"NO REPRESENTATION OR WARRANTY, EXPRESSED OR IMPLIED, IS MADE THAT THE USE OR DISCLOSURE OF ANY INFORMATION, APPARATUS, METHOD OR PROCESS DISCLOSED IN THESE DRAWINGS MAY NOT INFRINGE PRIVATE RIGHTS OF OTHERS. NO LIABILITY IS ASSUMED WITH RESPECT TO THE USE OF, OR FOR DAMAGES RESULTING FROM THE USE, ANY INFORMATION, APPARATUS, METHOD OR PROCESS DISCLOSED IN THESE DRAWINGS. THE DRAWINGS ARE BEING MADE FOR INFORMATION TO BIDDERS AND ARE NOT TO BE USED FOR OTHER PURPOSES, AND ARE TO BE RETURNED UPON REQUEST OF THE FORWARDING CONTRACTOR."

SECTION NUMBER OR DETAIL LETTER
DRAWING ON WHICH SECTION OR DETAIL IS TAKEN
DRAWING ON WHICH SECTION OR DETAIL IS SHOWN
SECTION AND DETAIL KEY

P:\LATA ENVIRONMENTAL SERVICES OF KENTUCKY\11105.07 NE PLUME 2013 DESIGN\DRAFTING- GIS\CADD\03-CIVIL\06 - C7DC7650AA002 - EW235-INF PP.DWG

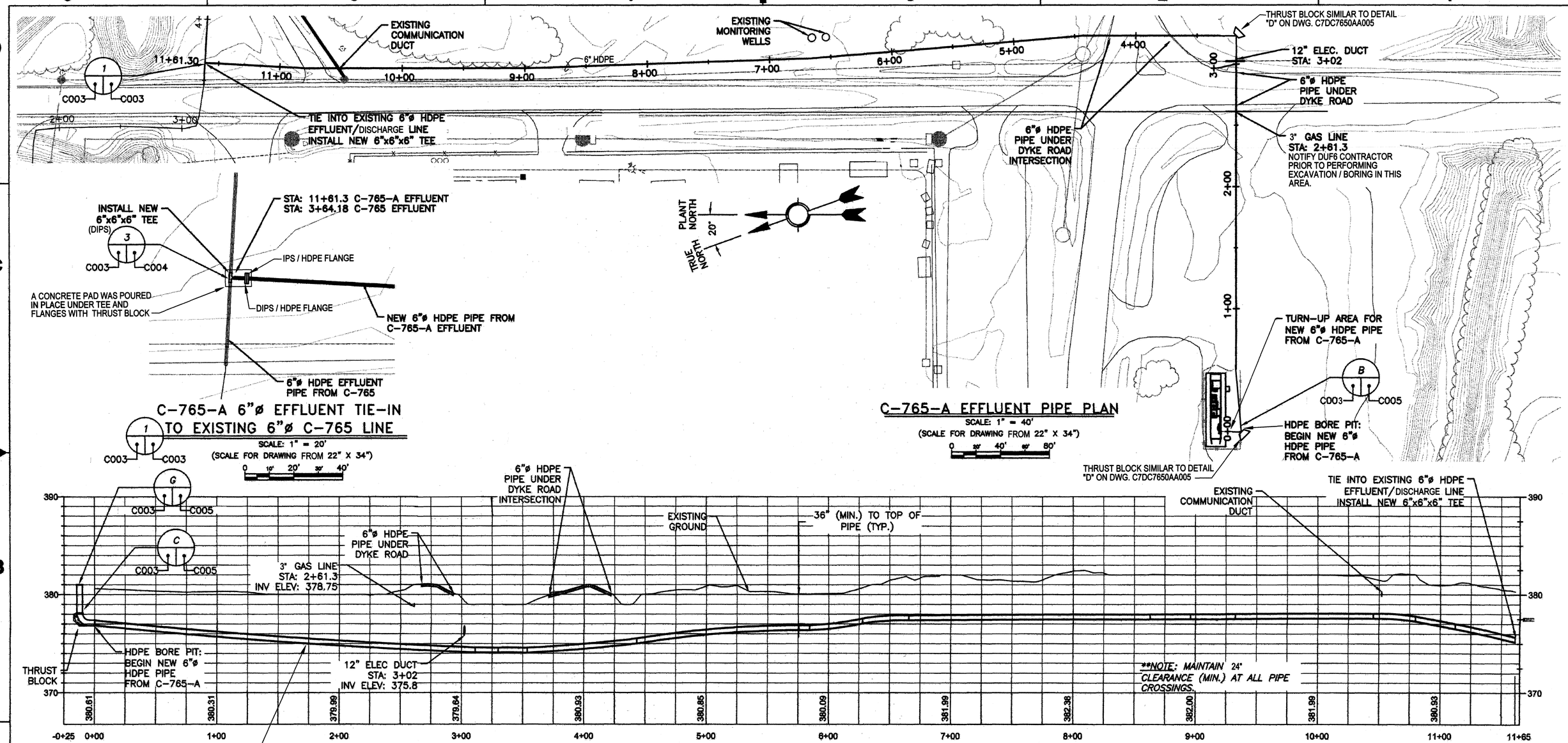

C-765-A EFFLUENT PIPE PROFILE
SCALE: 1" = 40' HORZ. : 1" = 5' VERT.
(SCALE FOR DRAWING FROM 22" X 34")

PRIORITY 3

FLUOR. PADUCAH DEACTIVATION PROJECT
DOE Prime Contract #DE-DT0007774

U.S. DEPARTMENT OF ENERGY
PADUCAH, PORTSMOUTH PROJECT OPERATIONS, PADUCAH GASEOUS DIFFUSION PLANT

LATA Environmental Services of Kentucky, LLC managed for the DEPARTMENT OF ENERGY under U.S. GOVERNMENT contract DE-AC30-10CC40020 Paducah, Kentucky

DOE CONTRACT NO. DE-AC30-10CC40020

PROJECT NAME: NE PLUME OPTIMIZATION

TITLE: C-765-A EFFLUENT 6"ø HDPE PIPE PLAN & PROFILE

REV.	DATE	DESCRIPTION	DRAWN BY	DRAFT CHK	PROJ ENGR	LEAD ENGR	CONF CTRL/ HSQ, SFTY	FAC MGR	SAFS MGR
1	X	AS-BUILT ENTIRE DRAWING FOR ESO FA1951	X	X	X	X	X	X	X
FA1	X	CERTIFIED FOR CONSTRUCTION FOR ESO FA1951	X	X	X	X	X	X	X
1D	11/28/16	ISSUED FOR CONSTRUCTION	KTW	TAW	RE	TR	KAS		

DRAWING REVISIONS

LPE

STATE OF KENTUCKY — KAREN A. SIZEMORE 21059 — LICENSED PROFESSIONAL ENGINEER

Karen Sizemore 10/2/17

DATE:

PROFESSIONAL SEAL

REV.	FA1
DRW. K.T.WELSH	12/12/16
CHKR. T.A.WALKER	12/12/16
R.E. T.A.WALKER	12/12/16
T. R. N/A	
APPD. K.A.SIZEMORE	12/12/16
DRAWING APPROVALS	DATE

1	KTW	TAW	RE	X	KAS	10/2/17
REV	DRW	CHKR	RE	TR	APPD	DATE

"NO REPRESENTATION OR WARRANTY, EXPRESSED OR IMPLIED, IS MADE THAT THE USE OR DISCLOSURE OF ANY INFORMATION, APPARATUS, METHOD OR PROCESS DISCLOSED IN THESE DRAWINGS MAY NOT INFRINGE PRIVATE RIGHTS OF OTHERS. NO LIABILITY IS ASSUMED WITH RESPECT TO THE USE OF OR FOR DAMAGES RESULTING FROM THE USE ANY INFORMATION, APPARATUS, METHOD OR PROCESS DISCLOSED IN THESE DRAWINGS. THE DRAWINGS ARE BEING MADE FOR INFORMATION TO BIDDERS AND ARE NOT TO BE USED FOR OTHER PURPOSES, AND ARE TO BE RETURNED UPON REQUEST OF THE FORWARDING CONTRACTOR."

SECTION NUMBER OR DETAIL LETTER — DRAWING ON WHICH SECTION OR DETAIL IS TAKEN — DRAWING ON WHICH SECTION OR DETAIL IS SHOWN
SECTION AND DETAIL KEY

EDCS CAD FILENAME	BUILDING	PLANT	CLASS
C7DC7650AA003rev1.dwg	C-765-A	PDGP	U

SCALE:	DRAWING NUMBER	REV
N/A	C7DC7650AA003	1

P:\LATA ENVIRONMENTAL SERVICES OF KENTUCKY\11105.07 NE PLUME 2013 DESIGN\DRAFTING- GIS\CADD\03-CIVIL\07 - C7DC7650AA003 - C-765-A-EFF PP.DWG

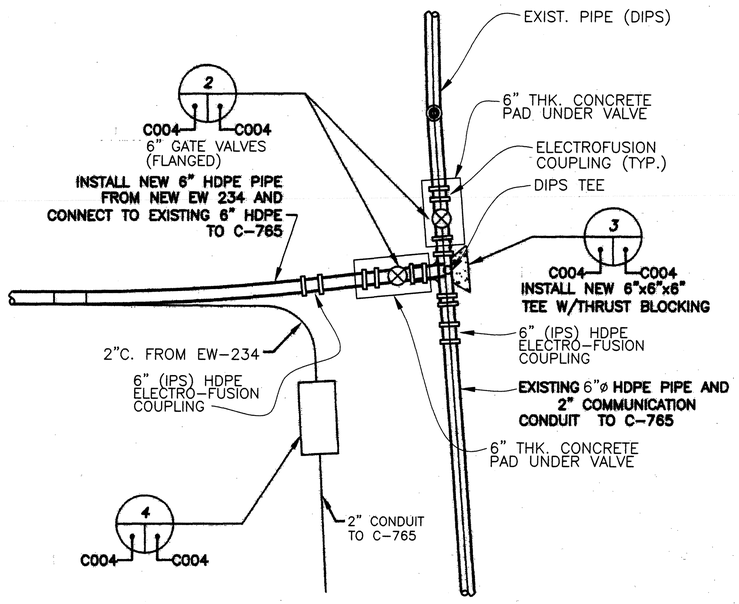

1 C-765 SYSTEM 6"x6"x6" TEE TO EXISTING

C001 C004

SCALE: 1" = 5'

(SCALE FOR DRAWING FROM 22" X 34")

0 2.5' 5' 7.5' 10'

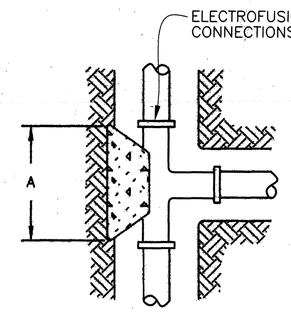

CONSTRUCTION KEY NOTES:

A. LENGTH "A" AS REQUIRED TO OBTAIN BEARING AREA AGAINST UNDISTURBED SOIL.
B. ADDITIONAL EXCAVATION MAYBE NECESSARY TO OBTAIN REQUIRED BEARING AREA.
C. MINIMUM THRUST BLOCK AREA REQUIREMENTS FOLLOWS:

PIPE SIZE	WATER PIPE	
	TEE THRUST BLOCK BASE "A"	THRUST BLOCK AREA
6"	2'0"	4 SQ. FEET

3 TYPICAL THRUST BLOCK AT TEE

C003 C004

GENERAL NOTES

GATE VALVE GENERAL NOTES:

1. GATE VALVES SHALL BE RESILIENT-WEDGE TYPE CONFORMING TO AWWA C515.
2. VALVES SHALL BE RATED AT 250 PSI WORKING PRESSURE.
3. ALL BODY AND BONNET BOLTS, STUDS, AND NUTS SHALL BE TYPE316 STAINLESS STEEL.
4. STEM SEALS SHALL BE O-RING TYPE.
5. VALVE OPERATORS SHALL BE 2 INCH SQUARE NUT TYPE.
6. VALVE END CONNECTIONS SHALL BE NORMALLY PUSH-ON OR MECHANICAL JOINT TYPE EXCEPT WHERE FLANGED END CONNECTIONS ARE REQUIRED.
7. THE INTERIOR AND EXTERIOR OF THE VALVE BODY SHALL BE COATED WITH 10 MILS MINIMUM OF EPOXY MATERIAL WHICH CONFORMS TO AWWA STANDARD C550.
8. VALVE SHALL BE MUELLER CO. A-2360 SERIES CLOW CORP. MODEL 2639, UNITED WATER PRODUCTS MODEL 2010, OR COMPANY APPROVED EQUAL.

VALVE BOX GENERAL NOTES:

1. ALL VALVES SHALL BE PROVIDED WITH VALVE BOXES.
2. VALVE BOXES SHALL BE STANDARD, ADJUSTABLE, HEAVY DUTY CAST IRON EXTENSION TYPE TWO PIECE, 5 /14 INCH SHAFT, SLIP TYPE, AND OF SUCH LENGTH AS NECESSARY TO EXTEND FROM VALVE TO FINISH GRADE.
3. D&L SUPPLY M-8030 OR COMPANY APPROVED. EQUAL.
4. NOT USED
5. TOPS SHALL BE SET AT FINAL ESTABLISHED GRADE.
6. IF VALVE BOXES ARE NOT OF SUFFICIENT HEIGHT TO BRING THE TOP OF THE BOX TO FINAL GRADE, A SECTION OF 6" DUCTILE IRON PIPE FOR PAVEMENT INSTALLATIONS OR 6" PVC TO NON-PAVEMENT INSTALLATION MAY BE USED TO EXTEND THE VALVE BOX TO FINAL GRADE.
7. THE LENGTH OF PIPE SHALL PERMIT THE VALVE BOX TO BE ADJUSTED UP AND DOWN.
8. ALL VALVES WILL BE INSTALLED WITH A BOX-LOK TYPE VALVE BOX CENTERING RING OR COMPANY APPROVED EQUAL.

THRUST BLOCK GENERAL NOTES:

1. CONCRETE SHALL HAVE A MINIMUM COMPRESSIVE STRENGTH OF 2500 PSI.
2. THRUST BLOCK SHALL BE EXTENDED TO UNDISTURBED SOIL.
3. KEEP CONCRETE CLEAR OF M.J. OR BELL AND SPIGOT JOINTS.
4. WHEN NECESSARY ADDITIONAL THRUST RESTRAINT METHODS MAY BE USED, SUCH AS MECHANICAL JOINT RESTRAINTS, TIE-RODS (INSTALLED PER MANUFACTURERS' RECOMMENDATIONS) OR OTHER COMPANY APPROVED METHODS.

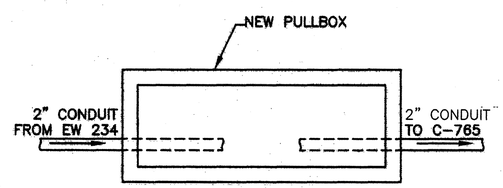

INSTALLATION NOTES:

1. CONDUIT TRENCHED FROM PULLBOX TO C-765.
2. SEE PULL BOX DETAIL "E" ON DRAWING C7DC7650AA005.
3. EXISTING CONDUIT FROM NE PUMP AND TREAT REMAIN AND NOT BE DISTURBED

4 NEW CONDUIT AT PULLBOX

C004 C004

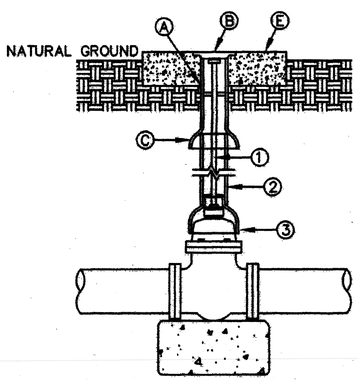

INSTALLATION NOTES:

1. ALL BURIED VALVES 5' AND DEEPER SHALL BE PROVIDED WITH SOLID STEEL EXTENSION STEM OPERATOR WITH 2" SQUARE AWWA NUT WITHIN 36" OF VALVE BOX COVER. NUT IS TO INDICATE DIRECTION OF ROTATION TO OPEN VALVE.
2. RISER PIPE TO BE 6" DIA. P.V.C. SEWER PIPE
3. RISER PIPE SHALL NOT REST ON VALVE BODY.

CONSTRUCTION KEY NOTES:

A. VALVE BOX
B. VALVE BOX COVER FLUSH WITH TOP OF CONCRETE COLLAR
C. FINAL SLEEVE TO VALVE BOX
D. NOT USED
E. 2'0"x2'0"x4" THICK CONCRETE APRON CENTERED AROUND VALVE BOX

2 6" GATE VALVE INSTALLATION

C004 C004

PRIORITY 3

FLUOR. PADUCAH DEACTIVATION PROJECT
DOE Prime Contract #DE-DT0007774

U.S. DEPARTMENT OF ENERGY
PADUCAH, PORTSMOUTH PROJECT OPERATIONS, PADUCAH GASEOUS DIFFUSION PLANT

LATA Environmental Services of Kentucky, LLC managed for the DEPARTMENT OF ENERGY under U.S. GOVERNMENT contract DE-AC30-10CC40020 Paducah, Kentucky

DOE CONTRACT NO. DE-AC30-10CC40020

PROJECT NAME: NE PLUME OPTIMIZATION

TITLE: OVERALL PIPE DETAILS

EDCS CAD FILENAME	BUILDING	PLANT	CLASS
C7DC7650AA004rev1.dwg	C-765	PDGP	U

SCALE:	DRAWING NUMBER	REV
N/A	C7DC7650AA004	1

LPE

STATE OF KENTUCKY KAREN A. SIZEMORE 21059 LICENSED PROFESSIONAL ENGINEER

Karen Sizemore 10/2/17

DATE:

PROFESSIONAL SEAL

REV	DRW	CHKR	RE	TR	APPD	DATE
1	KTW	JAW	JAW	X	KAS	10/2/17

REV.	FA1
DRW.	K.T.WELSH 12/8/16
CHKR.	T.A.WALKER 12/9/16
R.E.	T.A.WALKER 12/9/16
T. R.	N/A
APPD.	K.A.SIZEMORE 12/12/16
DRAWING APPROVALS	DATE

REV.	DATE	DESCRIPTION	DRAWN BY	DRAFT CHK	PROJ ENGR	LEAD ENGR	CONF CTRL/ MUSL SFTY	FAC MGR	EATS MGR
1	X	AS-BUILT ENTIRE DRAWING FOR ESO FA1951	X	X	X	X	X	X	X
FA1	X	CERTIFIED FOR CONSTRUCTION FOR ESO FA1951	X	X	X	X	X	X	X
0	11/20/13	ISSUED FOR CONSTRUCTION	TCP	JAB	BW	TP	JWT	DJC	KAS

DRAWING REVISIONS

"NO REPRESENTATION OR WARRANTY, EXPRESSED OR IMPLIED, IS MADE THAT THE USE OR DISCLOSURE OF ANY INFORMATION, APPARATUS, METHOD OR PROCESS DISCLOSED IN THESE DRAWINGS MAY NOT INFRINGE PRIVATE RIGHTS OF OTHERS. NO LIABILITY IS ASSUMED WITH RESPECT TO THE USE OF, OR FOR DAMAGES RESULTING FROM THE USE, ANY INFORMATION, APPARATUS, METHOD OR PROCESS DISCLOSED IN THESE DRAWINGS. THE DRAWINGS ARE BEING MADE FOR INFORMATION TO BIDDERS AND ARE NOT TO BE USED FOR OTHER PURPOSES, AND ARE TO BE RETURNED UPON REQUEST OF THE FORWARDING CONTRACTOR."

SECTION NUMBER OR DETAIL LETTER — DRAWING ON WHICH SECTION OR DETAIL IS TAKEN — DRAWING ON WHICH SECTION OR DETAIL IS SHOWN

SECTION AND DETAIL KEY

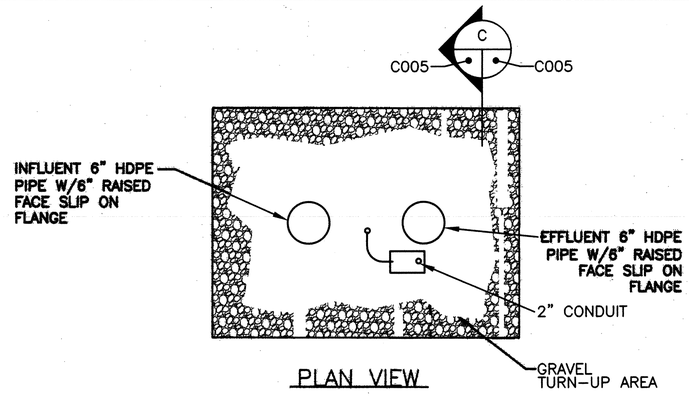

PLAN VIEW

B — C002 C003 — C005

C-765-A PIPE TURN-UP AREA

SCALE: 1" = 1'
(SCALE FOR DRAWING FROM 22" X 34")
0 0.5' 1' 1.5' 2'

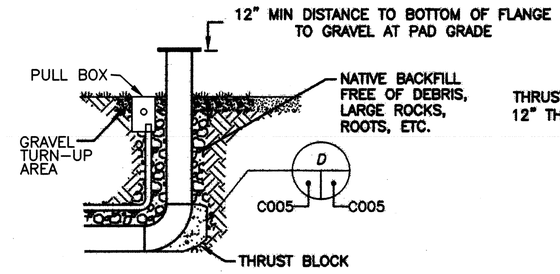

C — C002 C003 — C005

C-765-A PIPE TURN-UP

SCALE: NTS

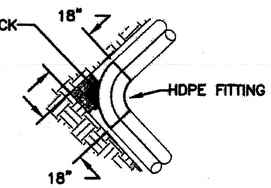

D — C005 — C005

C-765-A PIPE THRUST BLOCK

SCALE: NTS

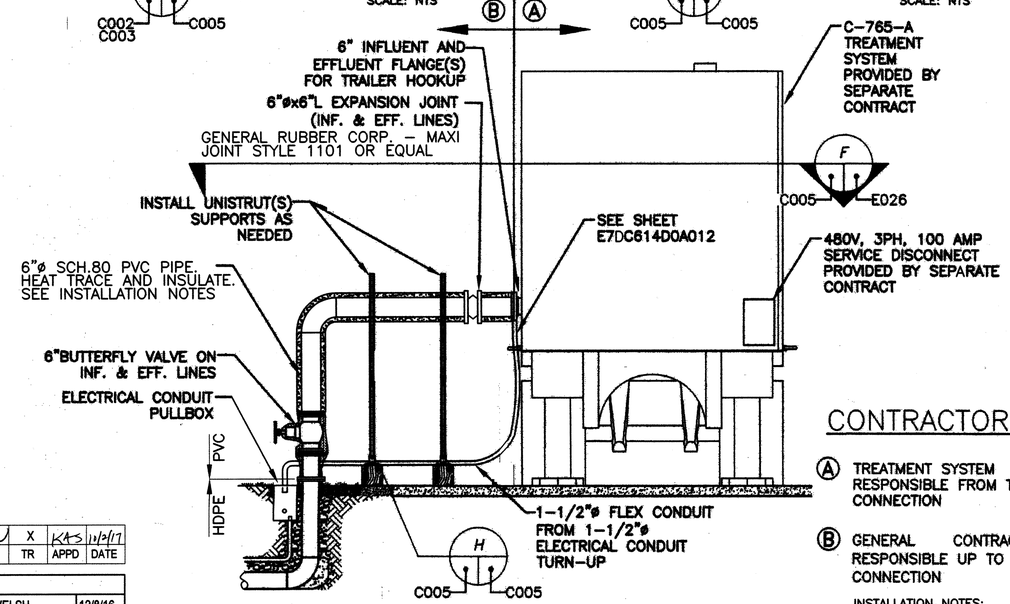

G — C002 C003 — C005

C-765-A PIPE HOOKUP

SCALE: NTS

QUAZITE PG1324BA18 BOX AND PG1324CA0009 COVER OR COMPANY APPROVED EQUAL. PULLBOX SPACING SHALL NOT EXCEED 500'

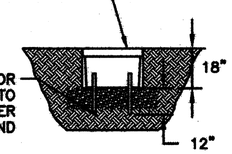

E — C001 — C005

CONDUIT PULL BOX DETAIL

SCALE: NTS.

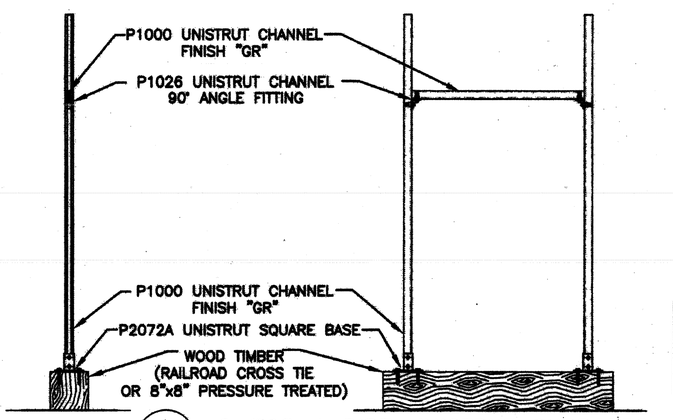

H — C005 — C005

C-765-A PIPE UNISTRUT SUPPORTS

SCALE: NTS

NOTE: UNISTRUT SUPPORT OR EQUAL SUBSTITUTE

CONTRACTOR NOTES

Ⓐ TREATMENT SYSTEM CONTRACTOR – RESPONSIBLE FROM THE FLANGE CONNECTION

Ⓑ GENERAL CONTRACTOR – RESPONSIBLE UP TO THE FLANGE CONNECTION

INSTALLATION NOTES:

1. INSTALL HEAT TRACE IN ACCORDANCE WITH REQUIREMENTS ON DWG. E7DC7650AA026
2. INSTALL 2" THK. FIBERGLASS INSULATION ON ALL EXPOSED PIPING AND COMPONENTS. INSTALL ALUMINUM JACKET OVER ALL INSULATION.

REV	DRW	CHKR	RE	TR	APPD	DATE
1	KTW	JAW	JAW	X	KAS	11/2/17

REV. FA1		
DRW.	K.T.WELSH	12/8/16
CHKR.	T.A.WALKER	12/9/16
R.E.	T.A.WALKER	12/9/16
T. R.	N/A	
APPD.	K.A.SIZEMORE	12/12/16
DRAWING APPROVALS		DATE

PRIORITY 3

FLUOR. PADUCAH DEACTIVATION PROJECT
DOE Prime Contract #DE-DT0007774

U.S. DEPARTMENT OF ENERGY
PADUCAH, PORTSMOUTH PROJECT OPERATIONS, PADUCAH GASEOUS DIFFUSION PLANT

LATA Environmental Services of Kentucky, LLC — managed for the DEPARTMENT OF ENERGY under U.S. GOVERNMENT contract DE-AC30-10CC40020 Paducah, Kentucky

DOE CONTRACT NO. DE-AC30-10CC40020

PROJECT NAME: NE PLUME OPTIMIZATION

TITLE: EW 235, EW 234, AND C-765-A PIPE AND INSTALLATION DETAILS

EDCS CAD FILENAME	BUILDING	PLANT	CLASS
C7DC7650AA005rev1.dwg	C-765-A	PDGP	U

SCALE:	DRAWING NUMBER	REV
N/A	C7DC7650AA005	1

LPE

STATE OF KENTUCKY — KAREN A. SIZEMORE 21059 — LICENSED PROFESSIONAL ENGINEER
Karen A. Sizemore 10/2/17

DATE:

PROFESSIONAL SEAL

REV.	DATE	DESCRIPTION	DRAWN BY	DRAFT CHK	PROJ ENGR	LEAD ENGR	CONF CTRL/ NUCL SFTY	FAD MGR	SAFTS MGR
1	X	AS-BUILT ENTIRE DRAWING FOR ESO FA1951	X	X	X	X	X	X	X
FA1	X	CERTIFIED FOR CONSTRUCTION FOR ESO FA1951	X	X	X	X	X	X	X
A	11/28/13	ISSUED FOR CONSTRUCTION	KTW	JW	JAW	TW	JAT	KAS	JAW

DRAWING REVISIONS

"NO REPRESENTATION OR WARRANTY, EXPRESSED OR IMPLIED, IS MADE THAT THE USE OR DISCLOSURE OF ANY INFORMATION, APPARATUS, METHOD OR PROCESS DISCLOSED IN THESE DRAWINGS MAY NOT INFRINGE PRIVATE RIGHTS OF OTHERS. NO LIABILITY IS ASSUMED WITH RESPECT TO THE USE OF, OR FOR DAMAGES RESULTING FROM THE USE, ANY INFORMATION, APPARATUS, METHOD OR PROCESS DISCLOSED IN THESE DRAWINGS. THE DRAWINGS ARE BEING MADE FOR INFORMATION TO BIDDERS AND ARE NOT TO BE USED FOR OTHER PURPOSES, AND ARE TO BE RETURNED UPON REQUEST OF THE FORWARDING CONTRACTOR."

SECTION NUMBER OR DETAIL LETTER — DRAWING ON WHICH SECTION OR DETAIL IS TAKEN — DRAWING ON WHICH SECTION OR DETAIL IS SHOWN

SECTION AND DETAIL KEY

P:\LATA ENVIRONMENTAL SERVICES OF KENTUCKY\11105.07 NE PLUME 2013 DESIGN\DRAFTING- GIS\CADD\03-CIVIL\09 - C7DC7650AA005 - EW 235 PIPE DET.DWG

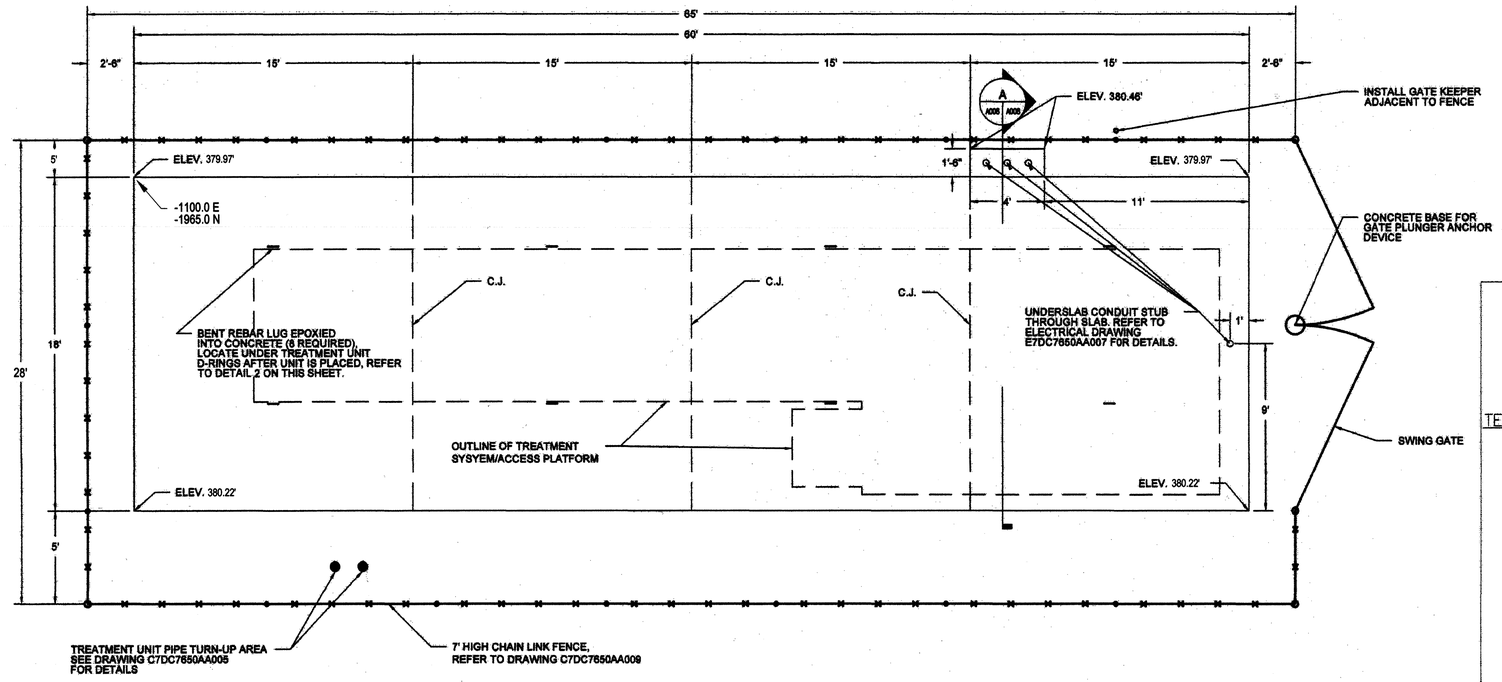

1 CONCRETE SLAB PLAN

Scale: 1/4" = 1'

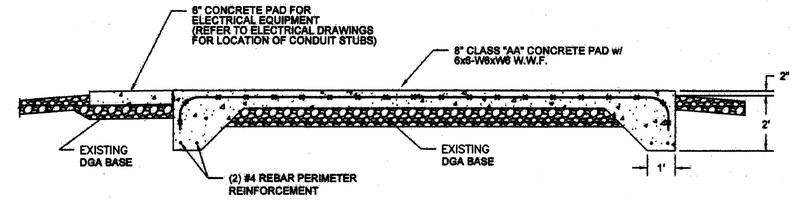

A A005 A005 SECTION THRU CONCRETE SLAB

Scale: 3/8" = 1'

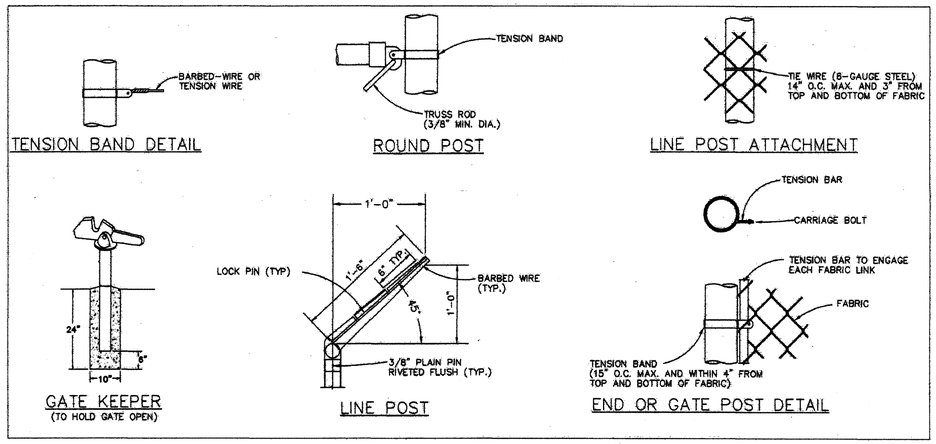

4 MISCELLANEOUS FENCING DETAILS

Scale: N.T.S.

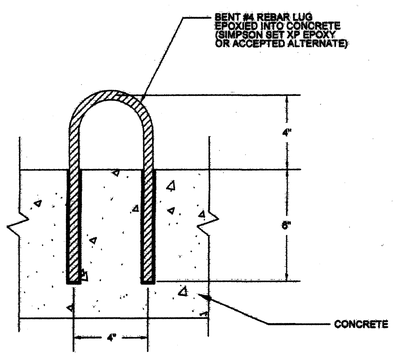

2 REBAR LUG DETAIL

Scale: 3" = 1'

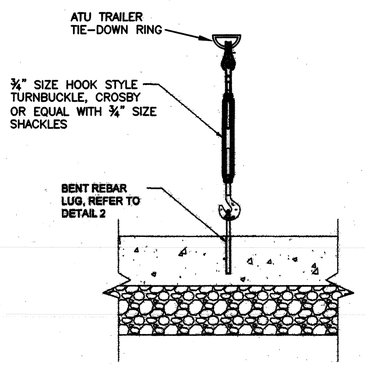

3 TRAILER TIE-DOWN DETAIL

Scale: 1" = 1'

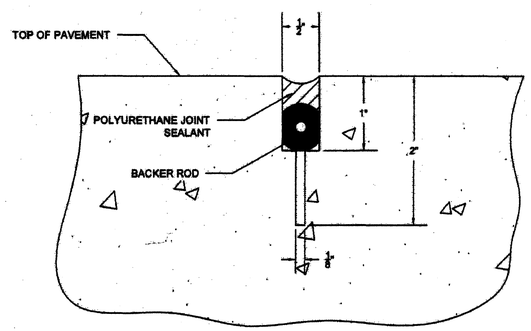

5 CONTROL JOINT (CJ) DETAIL

Scale: 1"=1'

PRIORITY 3

REV	DRW	CHKR	RE	TR	APPD	DATE
1	KTW	TAW	TAW	X	KAS	10/2/17

REV. FA2	
DRW. R.FLOWERS	5/2/17
CHKR. T.A.WALKER	5/2/17
R.E. T.A.WALKER	5/2/17
T. R. N/A	
APPD. K.A.SIZEMORE	5/3/17
DRAWING APPROVALS	DATE

LPE

STATE OF KENTUCKY KAREN A. SIZEMORE 21059 LICENSED PROFESSIONAL ENGINEER

10/2/17

DATE

PROFESSIONAL SEAL

REV.	DATE	DESCRIPTION	DRAWN BY	DRAFT CHK	PROJ ENGR	LEAD ENGR	CONF CTRL/ NUCL SFTY	FAC MGR	EAITS MGR
1	X	AS-BUILT ENTIRE DRAWING FOR ESO FA1951 INC. ECR-2017-0003	X	X	X	X	X	X	X
FA2	X	CERTIFIED FOR CONSTRUCTION FOR ESO FA1951 FOR ECR-2017-0003	X	X	X	X	X	X	X
FA1	X	CERTIFIED FOR CONSTRUCTION FOR ESO FA1951	KTW	TAW	TAW	KAS	X	X	X
0	9/6/17	ISSUED FOR CONSTRUCTION	BJ	KTW	TAW	KAS	X	KAS	

DRAWING REVISIONS

FLUOR. PADUCAH DEACTIVATION PROJECT
DOE Prime Contract #DE-DT0007774

U.S. DEPARTMENT OF ENERGY
PADUCAH, PORTSMOUTH PROJECT OPERATIONS,
PADUCAH GASEOUS DIFFUSION PLANT

LATA Environmental Services of Kentucky, LLC managed for the DEPARTMENT OF ENERGY under U.S. GOVERNMENT contract DE-AC30-10CC40020 Paducah, Kentucky

DOE CONTRACT NO. DE-AC30-10CC40020

PROJECT NAME: NE PLUME OPTIMIZATION

TITLE: C-765-A PAD DESIGN

EDCS CAD FILENAME	BUILDING	PLANT	CLASS
C7DC7650AA008rev1.dwg	C765A	PGDP	U

SCALE:	DRAWING NUMBER	REV
AS SHOWN	C7DC7650AA008	1

NO REPRESENTATION OR WARRANTY, EXPRESSED OR IMPLIED, IS MADE AS TO THE ACCURACY, COMPLETENESS OR USEFULNESS OF THE INFORMATION OR STATEMENTS CONTAINED IN THESE DRAWINGS, OR THAT THE USE OR DISCLOSURE OF ANY INFORMATION, APPARATUS, METHOD, OR PROCESS DISCLOSED IN THESE DRAWINGS MAY NOT INFRINGE PRIVATE RIGHTS OF OTHERS. NO LIABILITY IS ASSUMED WITH RESPECT TO THE USE OF, OR FOR DAMAGES RESULTING FROM THE USE OF ANY INFORMATION, APPARATUS, METHOD, OR PROCESS DISCLOSED IN THESE DRAWINGS. DRAWINGS MADE AVAILABLE FOR INFORMATION TO BIDDER ARE TO BE USED FOR OTHER PURPOSES AND ARE TO BE RETURNED UPON REQUEST OF THE FORWARDING CONTRACTOR.

SECTION NUMBER OR DETAIL LETTER
DRAWING ON WHICH SECTION OR DETAIL IS TAKEN
DRAWING ON WHICH SECTION OR DETAIL IS SHOWN

SECTION AND DETAIL KEY

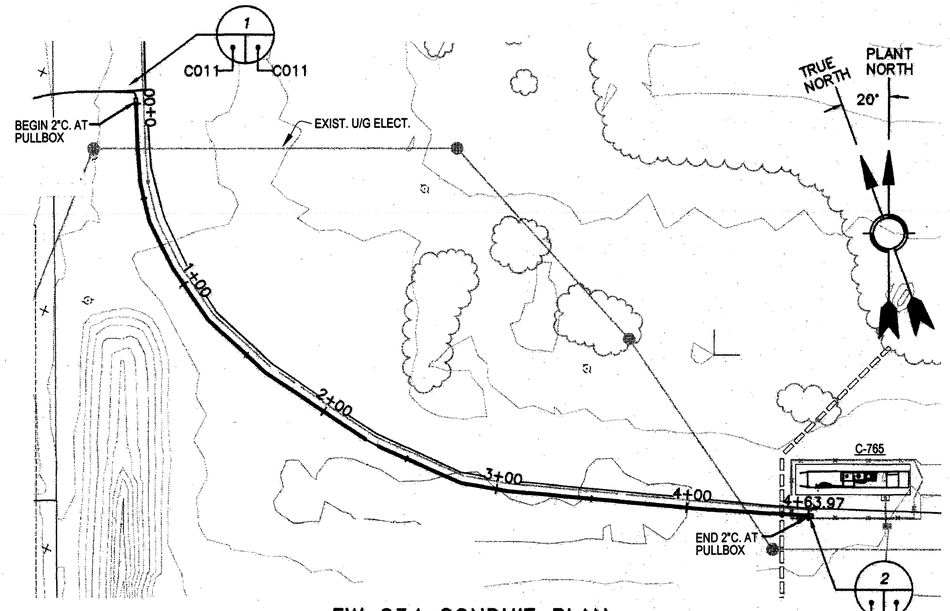

EW 234 CONDUIT PLAN

SCALE: 1" = 40'
(SCALE FOR DRAWING FROM 22" X 34")
0 20' 40' 60' 80'

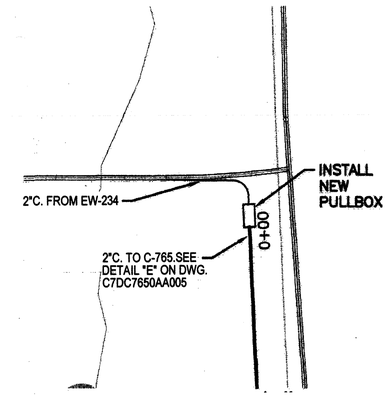

EW-234 2" CONDUIT TIE-IN 2" CONDUIT TO C-765

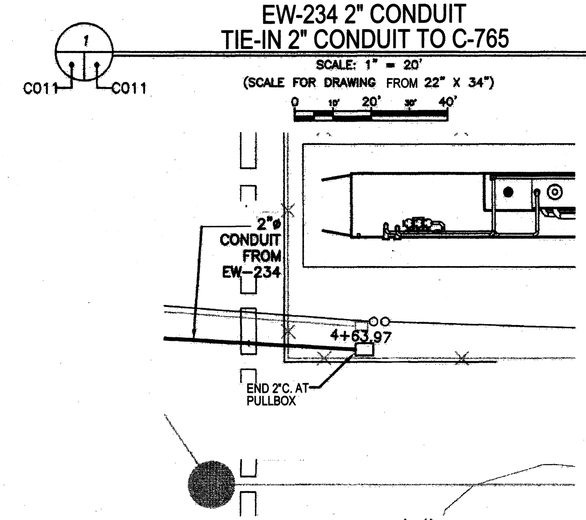

SCALE: 1" = 20'
(SCALE FOR DRAWING FROM 22" X 34")
0 10' 20' 30' 40'

EW-234 2" CONDUIT AT C-765 PULL BOX

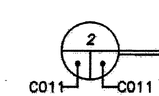

SCALE: 1" = 20'
(SCALE FOR DRAWING FROM 22" X 34")
0 10' 20' 30' 40'

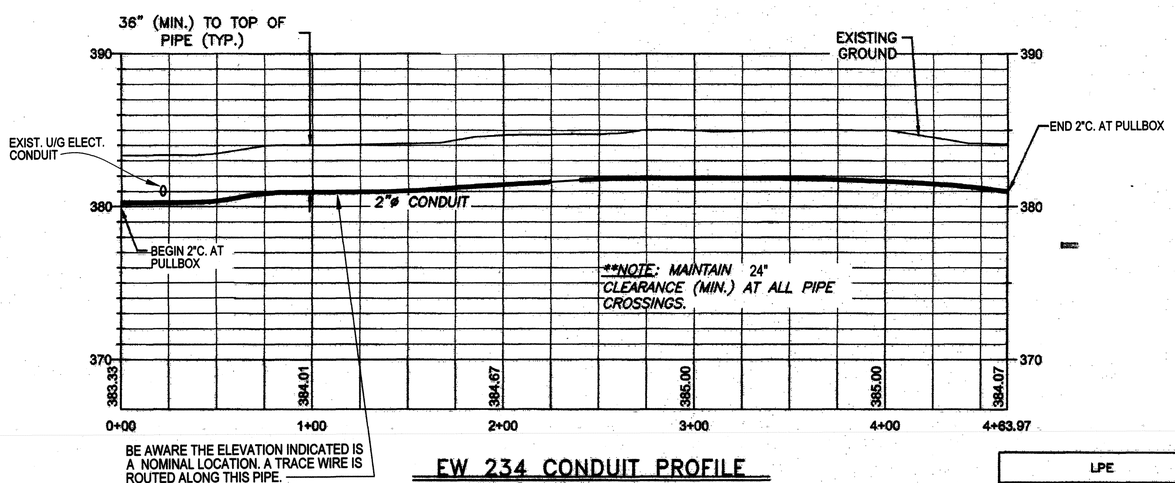

EW 234 CONDUIT PROFILE

SCALE: 1" = 40' HORZ. : 1" = 5' VERT.
(SCALE FOR DRAWING FROM 22" X 34")
0 20' 40' 60' 80'

PRIORITY 3

REV	DRW	CHKR	RE	TR	APPD	DATE
1	ETN	2aw	2aw	X	KAS	10/2/17

REV. FA1	
DRW. K.T.WELSH	12/12/16
CHKR. T.A.WALKER	12/12/16
R.E. T.A.WALKER	12/12/16
T. R. N/A	
APPD. K.A.SIZEMORE	12/12/16
DRAWING APPROVALS	DATE

LPE

STATE OF KENTUCKY
R. CLAY SLUSMEYER
23421
LICENSED PROFESSIONAL ENGINEER

R.C. Slusmeyer

DATE: 10/2/2017
PROFESSIONAL SEAL

REV.	DATE	DESCRIPTION	DRAWN BY	DSIGN'T CHK	PROJ ENGR	LEAD ENGR	CONF. CHK/ MAG. SFTY	FAC MAN	ENTR MAN
1	X	AS-BUILT ENTIRE DRAWING FOR ESO FA1951	X	X	X	X	X	X	X
FA1	X	CERTIFIED FOR CONSTRUCTION FOR ESO FA1951	X	X	X	X	X	X	X
0	11/20/13	ISSUED FOR CONSTRUCTION	KCM	SP	AK	TR	TAS	DJV	KAS

DRAWING REVISIONS

FLUOR. PADUCAH DEACTIVATION PROJECT
DOE Prime Contract #DE-DT0007774

U.S. DEPARTMENT OF ENERGY
PADUCAH, PORTSMOUTH PROJECT OPERATIONS, PADUCAH GASEOUS DIFFUSION PLANT

LATA Environmental Services of Kentucky, LLC managed for the DEPARTMENT OF ENERGY under U.S. GOVERNMENT contract DE-AC30-10CC40020 Paducah, Kentucky

DOE CONTRACT NO. DE-AC30-10CC40020

PROJECT NAME:
NE PLUME OPTIMIZATION

TITLE:
EW 234 ELECTRICAL CONDUIT TO C-765 PLAN & PROFILE

EDGS CAD FILENAME	BUILDING	PLANT	CLASS
C7DC7650AA011rev1.dwg	C-765	PDGP	U

SCALE:	DRAWING NUMBER	REV
N/A	C7DC7650AA011	1

"NO REPRESENTATION OR WARRANTY, EXPRESSED OR IMPLIED, IS MADE THAT THE USE OR DISCLOSURE OF ANY INFORMATION, APPARATUS, METHOD OR PROCESS DISCLOSED IN THESE DRAWINGS MAY NOT INFRINGE PRIVATE RIGHTS OF OTHERS. NO LIABILITY IS ASSUMED WITH RESPECT TO THE USE OF, OR FOR DAMAGES RESULTING FROM THE USE, ANY INFORMATION, APPARATUS, METHOD OR PROCESS DISCLOSED IN THESE DRAWINGS. THE DRAWINGS ARE BEING MADE FOR INFORMATION TO BIDDERS AND ARE NOT TO BE USED FOR OTHER PURPOSES, AND ARE TO BE RETURNED UPON REQUEST OF THE FORWARDING CONTRACTOR."

SECTION NUMBER OR DETAIL LETTER
DRAWING ON WHICH SECTION OR DETAIL IS TAKEN
DRAWING ON WHICH SECTION OR DETAIL IS SHOWN
SECTION AND DETAIL KEY

P:\LATA ENVIRONMENTAL SERVICES OF KENTUCKY\11105.07 NE PLUME 2013 DESIGN\DRAFTING- GIS\CADD\03-CIVIL\15 - C7DC7650AA011 - EW234 CONDUIT PP.DWG

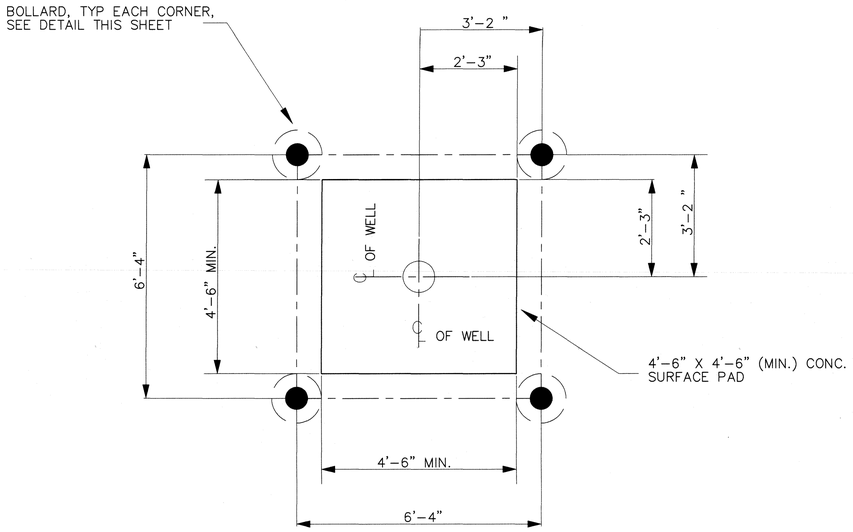

CONCRETE PAD AND BOLLARD LOCATION PLAN

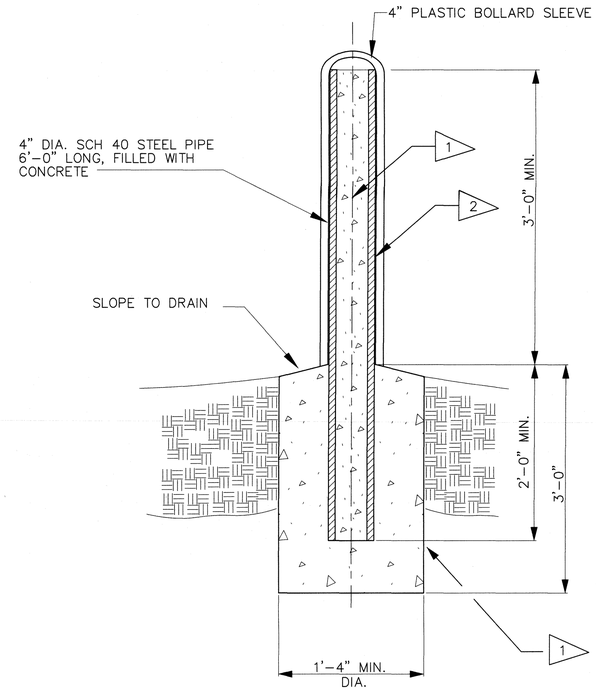

TYPICAL BOLLARD DETAIL

GENERAL NOTES:

1. CONCRETE FOR BOLLARDS SHALL BE CLASS "A" IN ACCORDANCE WITH KENTUCKY DEPARTMENT OF HIGHWAYS STANDARD SPECIFICATION SECTION 601.
2. BOLLARD SHALL BE CLEANED ACCORDING TO SSPC-SP6 AND PRIMED WITH TNEMEC SERIES 37-77W @ 3-5 MILS OR COMPANY ACCEPTED EQUAL. AFTER PRIMING IS COMPLETE INSTALL PLASTIC BOLLARD POST SLEEVE ($\frac{1}{4}$" THICK MINIMUM). TRIM EXCESS LENGTH AS REQUIRED TO MATCH HEIGHT OF CONCRETE BOLLARD. BOLLARD SLEEVES SHALL BE A HIGHLY VISIBLE COLOR.

REFERENCE DRAWINGS	DRAWING NO.
GROUND WATER PIEZOMETER WELLS INSTALLATION DETAILS	C5E-FA1950-A12
GROUND WATER MONITORING WELLS INSTALLATION DETAILS	C7DCWELLSA003

THIS DRAWING PRODUCED ON AUTOCAD
DO NOT REVISE MANUALLY

LPE

STATE OF KENTUCKY
KAREN A. SIZEMORE
21059
LICENSED PROFESSIONAL ENGINEER

Karen A. Sizemore
9/25/17

DATE

PROFESSIONAL SEAL

SECTION NUMBER OR DETAIL LETTER
DRAWING ON WHICH SECTION OR DETAIL IS TAKEN
DRAWING ON WHICH SECTION OR DETAIL IS SHOWN
SECTION AND DETAIL KEY

TOLERANCES
UNLESS OTHERWISE SPECIFIED
FRACTIONS ± 1/16"
XX DECIMALS
XXX DECIMALS
ANGLES
BREAK SHARP EDGES MAX.
FINISH

"NO REPRESENTATION OR WARRANTY, EXPRESSED OR IMPLIED, IS MADE THAT THE USE OR DISCLOSURE OF ANY INFORMATION, APPARATUS, METHOD OR PROCESS DISCLOSED IN THESE DRAWINGS MAY NOT INFRINGE PRIVATE RIGHTS OF OTHERS. NO LIABILITY IS ASSUMED WITH RESPECT TO THE USE OF, OR FOR DAMAGES RESULTING FROM THE USE ANY INFORMATION, APPARATUS, METHOD OR PROCESS DISCLOSED IN THESE DRAWINGS. THE DRAWINGS ARE BEING MADE FOR INFORMATION TO BIDDER AND ARE NOT TO BE USED FOR OTHER PURPOSES, AND ARE TO BE RETURNED UPON REQUEST OF THE FORWARDING CONTRACTOR."

REV. NO.	ISSUE / REVISION DESCRIPTION	DATE	DRW	CHKR	RE	TR	APPD
0	AS-BUILT ENTIRE DRAWING FOR ESD FA1950, INC. ECN-2016-0059	9/25/17 X	KAW X	DAW X	DAW X	X X	KAS X
FA2	CERTIFIED FOR CONSTRUCTION FOR ECN-2016-0059	X	X	X	X	X	X
FA1	CERTIFIED FOR CONSTRUCTION FOR ESD FA1950	3/2/16	DJH	GWD	GWD	N/A	KAS

REVISION OR ISSUE APPROVALS

DRAWING APPROVALS		DATE
DRW	D. HATTON	9/8/16
CHKR	T.A.WALKER	9/8/16
RE	T.A.WALKER	9/8/16
TR	N/A	
APPD	K.SIZEMORE	9/8/16

FLUOR.
PADUCAH DEACTIVATION PROJECT
DOE Prime Contract #DE-DT0007774

GROUND WATER MONITORING WELLS TYPICAL WELL DETAILS

PRIORITY 3

SCALE	PLANT	BLDG	FL	CLASS
NONE	PGDP	N/A	N/A	U

ID		REV
FA1950	C7DCWELLSA002	0

Sep 13, 2017

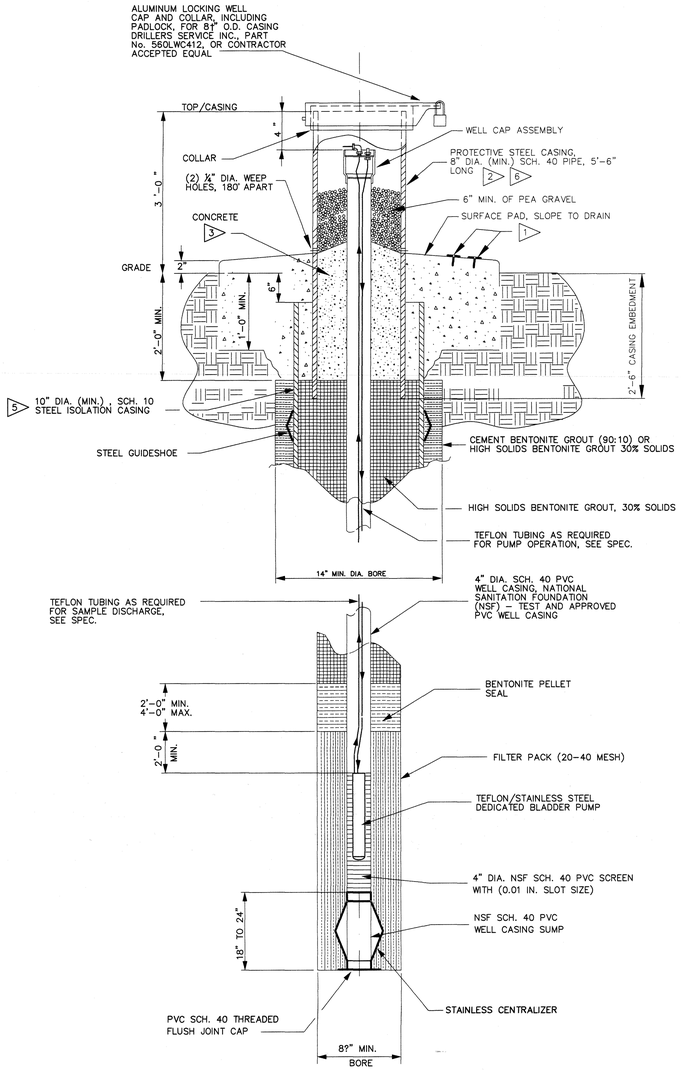

MONITORING WELL WITH ISOLATION CASING

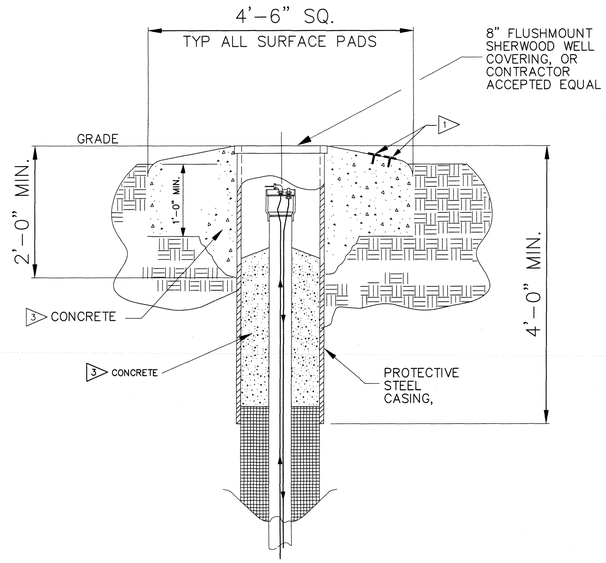

FLUSH MOUNT SURFACE PAD ARRANGEMENT

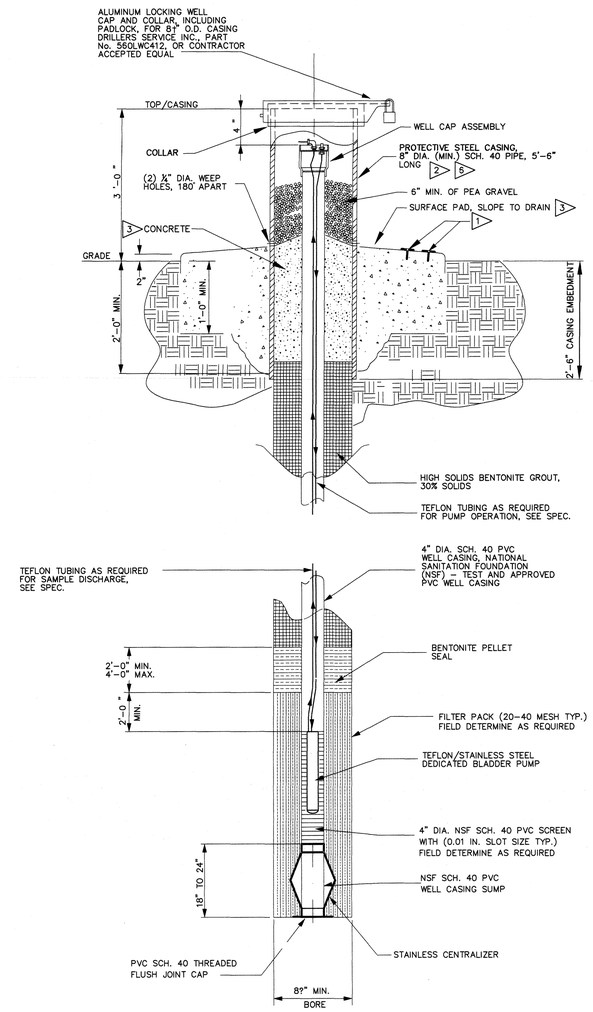

MONITORING WELL WITHOUT ISOLATION CASING

GENERAL NOTES:

1. INSTALL TWO BRASS PLATE MONUMENTS. SUB-CONTRACTOR SHALL STAMP WELL NUMBER, COORDINATES, ELEVATIONS, AND ASSEMBLED KENTUCKY GROUNDWATER DATABASE REGISTRATION NUMBER (MIN. OF ½" SIZE LETTERS) IN BRASS PLATE. BRASS PLATE SHALL BE DOMED SURVEY MARKER 3" DIA. LIETZNUMBER 8134-18 OR CONTRACTOR ACCEPTED EQUAL.
2. PROTECTIVE CASING SHALL BE CLEANED ACCORDING TO SSPC-SP6 AND PRIMED WITH TNEMEC SERIES 37-77W @ 3-5 MILS AND FINISHED WITH TNEMEC SERIES 82-BW56 @ 2-3 MILS, OR CONTRACTOR ACCEPTED EQUAL.
3. CONCRETE FOR PAD AND PROTECTIVE WELL CASING SHALL BE CLASS "A" IN ACCORDANCE WITH KDH STANDARD SPECIFICATION SECTION 601
4. OMIT
5. ISOLATION CASING TO BE INSTALLED IN CONFINING LAYER ABOVE RGA.
6. EACH PROTECTIVE CASING SHALL BE LABELED WITH BLACK LETTERS. LABEL SHALL INCLUDE THE PREFIX MW FOR MONITORING WELLS, THE PREFIX PZ FOR PIEZOMETERS AND THE NUMBER ASSIGNED BY THE CONTRACTOR. LETTERS SHALL BE A MINIMUM OF 2 INCHES HIGH.

REFERENCE DRAWINGS	DRAWING NO.
GROUND WATER MONITORING WELLS TYPICAL WELL DETAILS	C7DCWELLSA002

THIS DRAWING PRODUCED ON AUTOCAD
DO NOT REVISE MANUALLY

LPE

STATE OF KENTUCKY — KAREN A. SIZEMORE 21059 — LICENSED PROFESSIONAL ENGINEER

Karen A. Sizemore 9/25/17

DATE

PROFESSIONAL SEAL

SECTION NUMBER OR DETAIL LETTER — DRAWING ON WHICH SECTION OR DETAIL IS TAKEN — DRAWING ON WHICH SECTION OR DETAIL IS SHOWN

SECTION AND DETAIL KEY

TOLERANCES UNLESS OTHERWISE SPECIFIED
FRACTIONS ± 1/16
XX DECIMALS
XXX DECIMALS
ANGLES
BREAK SHARP EDGES MAX.
FINISH

"NO REPRESENTATION OR WARRANTY, EXPRESSED OR IMPLIED, IS MADE THAT THE USE OR DISCLOSURE OF ANY INFORMATION, APPARATUS, METHOD OR PROCESS DISCLOSED IN THESE DRAWINGS MAY NOT INFRINGE PRIVATE RIGHTS OF OTHERS. NO LIABILITY IS ASSUMED WITH RESPECT TO THE USE OF, OR FOR DAMAGES RESULTING FROM THE USE ,ANY INFORMATION, APPARATUS, METHOD OR PROCESS DISCLOSED IN THESE DRAWINGS. THE DRAWINGS ARE BEING MADE FOR INFORMATION TO BIDDER AND ARE NOT TO BE USED FOR OTHER PURPOSES, AND ARE TO BE RETURNED UPON REQUEST OF THE FORWARDING CONTRACTOR."

REV. NO.	ISSUE / REVISION DESCRIPTION	DATE	DRW	CHKR	RE	TR	APPD
0	AS-BUILT ENTIRE DRAWING FOR ESD FA1950	9/25/17	KRW	JGW	JGW	X	KAS
FA1	CERTIFIED FOR CONSTRUCION FOR ESD FA1950	X	X	X	X	X	X

REVISION OR ISSUE APPROVALS

DRAWING APPROVALS		DATE
DRW	D.HATTON	3/2/16
CHKR	G.DUNCAN	3/2/16
RE	G.DUNCAN	3/2/16
TR	N/A	
APPD	K.SIZEMORE	3/2/16

FLUOR. PADUCAH DEACTIVATION PROJECT
DOE Prime Contract #DE-DT0007774

GROUND WATER MONITORING WELLS INSTALLATION DETAILS

PRIORITY 3

SCALE	PLANT	BLDG	FL	CLASS
NONE	PGDP	N/A	N/A	U

ID FA1950 — C7DCWELLSA003 — REV 0

Sep 13, 2017

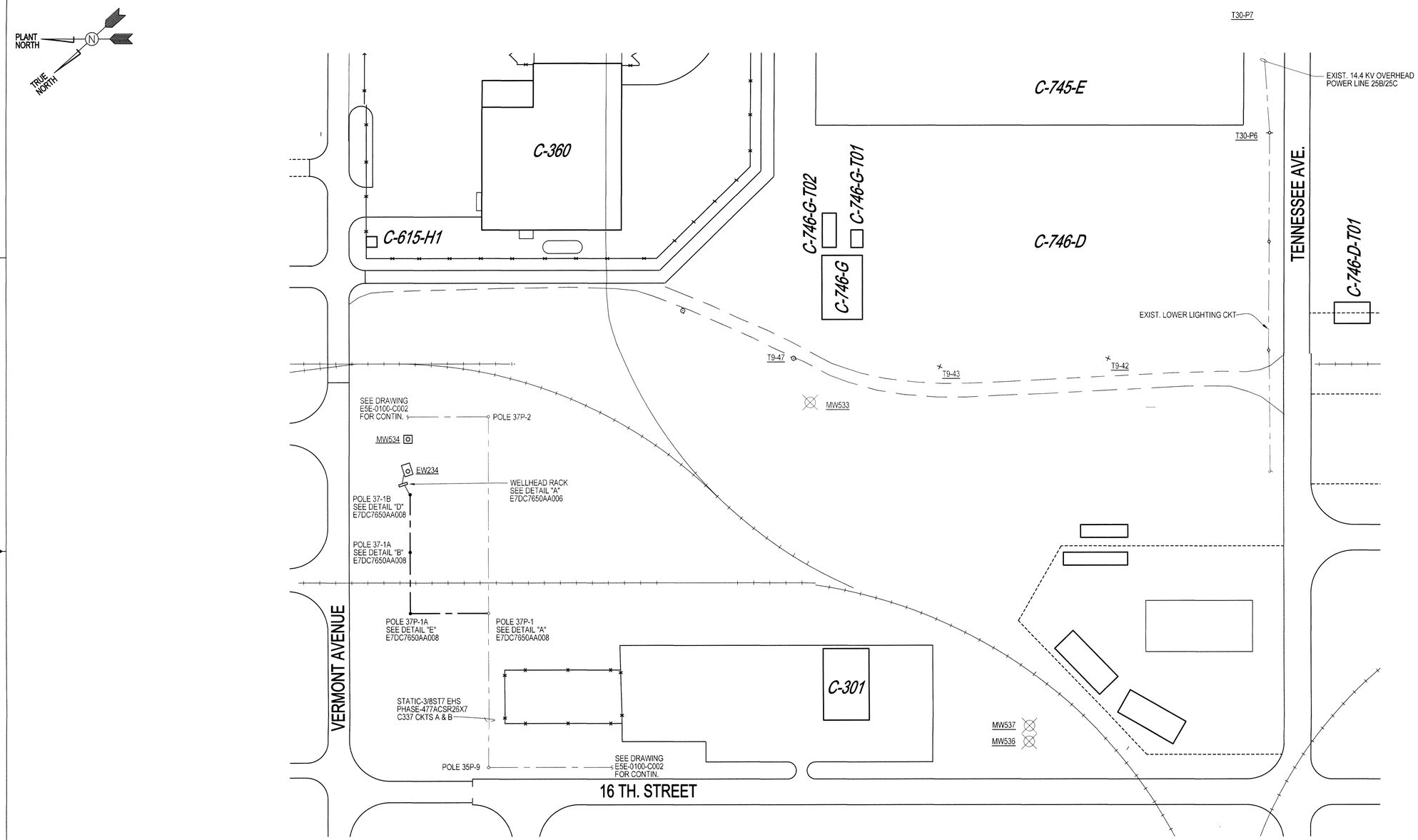

NOTE:
SEE POLE DETAILS ON DRAWING E7DC7650AA008

○ = EXISTING POWER POLE
● = NEW POWER POLE

EW234 - ELECTRICAL SITE PLAN

0 25' 50' 100' 150'

REFERENCE DRAWINGS	DRAWING NO.

NO REPRESENTATION OR WARRANTY, EXPRESSED OR IMPLIED, IS MADE AS TO THE ACCURACY, COMPLETENESS OR USEFULNESS OF THE INFORMATION OR STATEMENTS CONTAINED IN THESE DRAWINGS, OR THAT THE USE OR DISCLOSURE OF ANY INFORMATION, APPARATUS, METHOD, OR PROCESS DISCLOSED IN THESE DRAWINGS MAY NOT INFRINGE PRIVATE RIGHTS OF OTHERS. NO LIABILITY IS ASSUMED WITH RESPECT TO THE USE OF, OR FOR DAMAGES RESULTING FROM THE USE OF ANY INFORMATION, APPARATUS, METHOD, OR PROCESS DISCLOSED IN THESE DRAWINGS. DRAWINGS MADE AVAILABLE FOR INFORMATION TO BIDDER ARE TO BE USED FOR OTHER PURPOSES AND ARE TO BE RETURNED UPON REQUEST OF THE FORWARDING CONTRACTOR.

SECTION NUMBER OR DETAIL LETTER
DRAWING ON WHICH SECTION OR DETAIL IS TAKEN
DRAWING ON WHICH SECTION OR DETAIL IS SHOWN

SECTION AND DETAIL KEY

LPE

STATE OF KENTUCKY
R. CLAY SLUSMEYER
23421
LICENSED PROFESSIONAL ENGINEER

RCSlusmeyer
11/28/2017

DATE
PROFESSIONAL SEAL

REV.	DATE	DESCRIPTION	DRAWN BY	DRAFT CHK	PROJ ENGR	LEAD ENGR	CONF CTRL/ NUCL SFTY	FAC MGR	E&TS MGR
1	X	AS BUILT ENTIRE DRAWING FOR ESO FA1950	X	X	X	X	X	X	X
0	12/4/13	ISSUED FOR CONSTRUCTION	KTW	RCS	JGH	RCS	JBJ	DLA	KAF

DRAWING REVISIONS

REV	DRW	CHKR	RE	TR	APPD	DATE
1	KTW	RCS	RCS	X	KAS	11/28/17

FOUR RIVERS NUCLEAR PARTNERSHIP, LLC

U.S. DEPARTMENT OF ENERGY
PADUCAH, PORTSMOUTH PROJECT OPERATIONS,
PADUCAH GASEOUS DIFFUSION PLANT

LATA Environmental Services of Kentucky, LLC managed for the DEPARTMENT OF ENERGY under U.S. GOVERNMENT contract DE-AC30-10CC40020 Paducah, Kentucky

DOE CONTRACT NO. DE-AC30-10CC40020

PROJECT NAME:
NE PLUME OPTIMIZATION

TITLE:
EXTRACTION WELL EW234
ELECTRICAL SITE PLAN

EDCS CAD FILENAME	BUILDING	PLANT	CLASS
E7DC7650AA001 rev1.dwg	EW234	PGDP	U

SCALE:	DRAWING NUMBER	REV
AS SHOWN	E7DC7650AA001	1

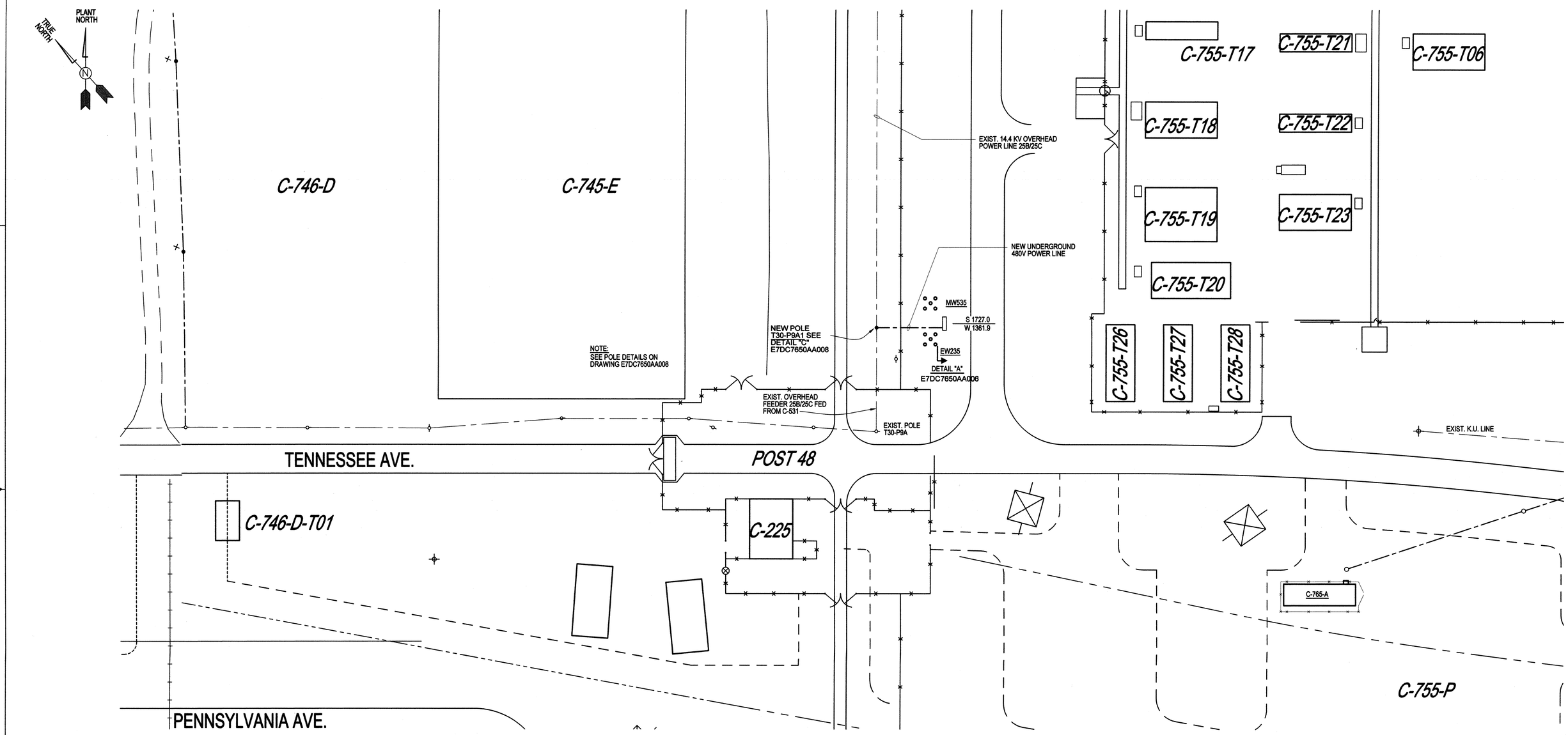

NOTE:
SEE POLE DETAILS ON DRAWING E7DC7650AA008

○ = EXISTING POWER POLE

PRIORITY 3

EXTRACTION WELL 235 - ELECTRICAL SITE PLAN

0 15' 30' 60' 90'

REFERENCE DRAWINGS	DRAWING NO.

NO REPRESENTATION OR WARRANTY, EXPRESSED OR IMPLIED, IS MADE AS TO THE ACCURACY, COMPLETENESS OR USEFULNESS OF THE INFORMATION OR STATEMENTS CONTAINED IN THESE DRAWINGS, OR THAT THE USE OR DISCLOSURE OF ANY INFORMATION, APPARATUS, METHOD, OR PROCESS DISCLOSED IN THESE DRAWINGS MAY NOT INFRINGE PRIVATE RIGHTS OF OTHERS. NO LIABILITY IS ASSUMED WITH RESPECT TO THE USE OF, OR FOR DAMAGES RESULTING FROM THE USE OF ANY INFORMATION, APPARATUS, METHOD, OR PROCESS DISCLOSED IN THESE DRAWINGS. DRAWINGS MADE AVAILABLE FOR INFORMATION TO BIDDER ARE TO BE USED FOR OTHER PURPOSES AND ARE TO BE RETURNED UPON REQUEST OF THE FORWARDING CONTRACTOR.

SECTION NUMBER OR DETAIL LETTER
DRAWING ON WHICH SECTION OR DETAIL IS TAKEN
DRAWING ON WHICH SECTION OR DETAIL IS SHOWN
SECTION AND DETAIL KEY

REV	DRW	CHKR	RE	TR	APPD	DATE
1	PAF	JH	NA	X	KAS	10/3/17

REV. FA1		
DRW.	Robin Flowers	12/8/16
CHKR.	Tim Gross	12/8/16
R.E.	Tim Gross	12/8/16
T.R.	Clay Slusmeyer	12/8/16
APPD.	Karen Sizemore	12/12/16
DRAWING APPROVALS		DATE

LPE

STATE OF KENTUCKY
R. CLAY SLUSMEYER
23421
LICENSED
PROFESSIONAL ENGINEER

R.C. Slusmeyer

DATE 10/2/2017
PROFESSIONAL SEAL

REV.	DATE	DESCRIPTION	DRAWN BY	DRAFT CHK	PROJ ENGR	LEAD ENGR	CONF CTRL/ NUCL SFTY	FAC MGR	EA/TS MGR
1	XXX	AS BUILT ENTIRE DRAWING FOR ESO FA1951	XXX	XXX	XXX	XXX	—	XXX	XXX
FA1	XXX	CERTIFIED FOR CONSTRUCTION FOR ESO FA1951	XXX	XXX	XXX	XXX	—	XXX	XXX
0	12/8/16	ISSUED FOR CONSTRUCTION	BTW	RCS	JGH	RCS	JBJ	DLA	KAF

DRAWING REVISIONS

FLUOR PADUCAH DEACTIVATION PROJECT
DOE Prime Contract #DE-DT0007774

U.S. DEPARTMENT OF ENERGY
PADUCAH, PORTSMOUTH PROJECT OPERATIONS, PADUCAH GASEOUS DIFFUSION PLANT

LATA Environmental Services of Kentucky, LLC managed for the DEPARTMENT OF ENERGY under U.S. GOVERNMENT contract DE-AC30-10CC40020 Paducah, Kentucky

DOE CONTRACT NO. DE-AC30-10CC40020

PROJECT NAME:
NE PLUME OPTIMIZATION

TITLE:
EXTRACTION WELL EW235
ELECTRICAL SITE PLAN

EDCS CAD FILENAME	BUILDING	PLANT	CLASS
E7DC7650AA002 rev1.dwg	C-765-A	PGDP	U

SCALE:	DRAWING NUMBER	REV
AS SHOWN	E7DC7650AA002	1

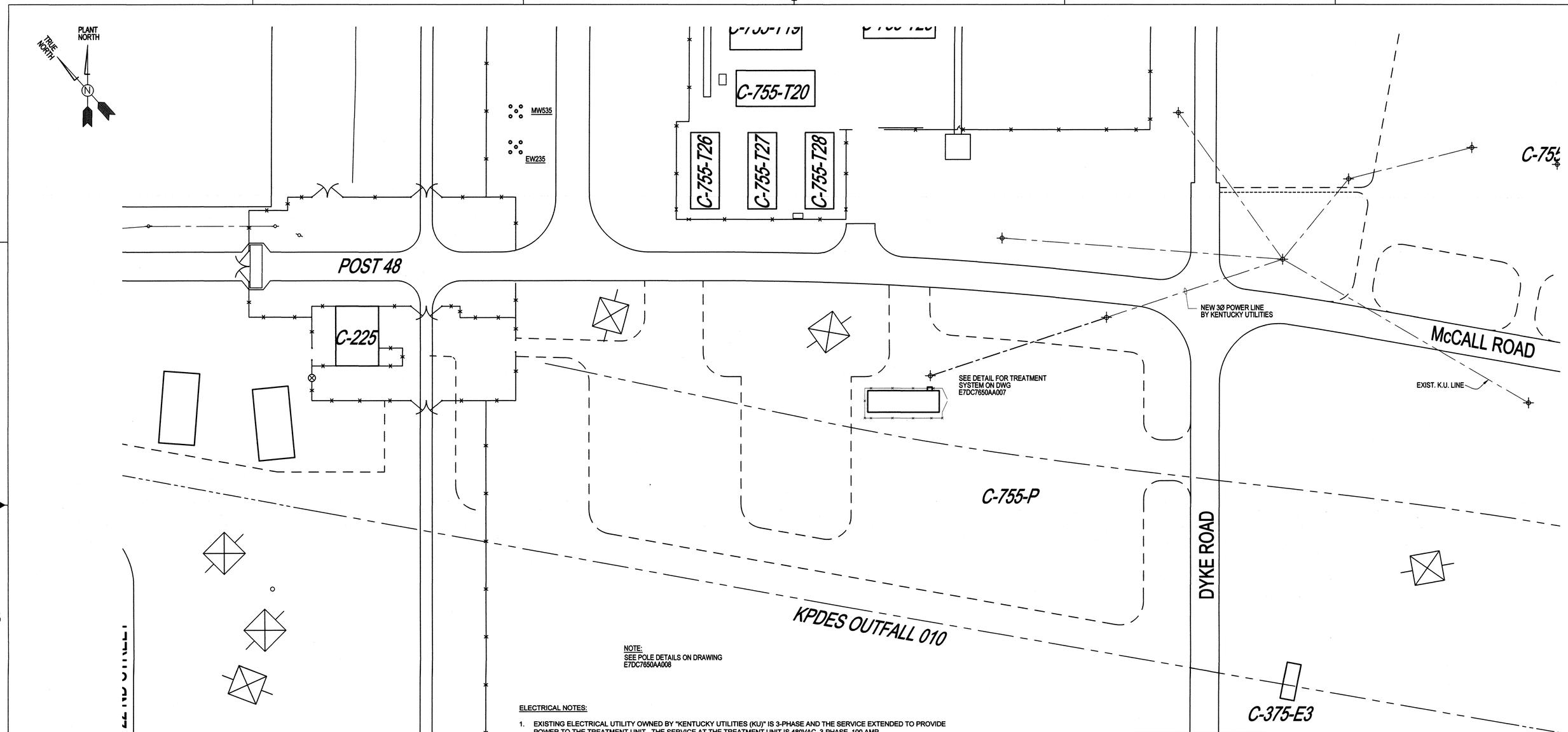

NOTE:
SEE POLE DETAILS ON DRAWING E7DC7650AA008

ELECTRICAL NOTES:

1. EXISTING ELECTRICAL UTILITY OWNED BY "KENTUCKY UTILITIES (KU)" IS 3-PHASE AND THE SERVICE EXTENDED TO PROVIDE POWER TO THE TREATMENT UNIT. THE SERVICE AT THE TREATMENT UNIT IS 480VAC, 3-PHASE, 100 AMP.

○ = EXISTING POWER POLE

REV.	FA1	
DRW.	Robin Flowers	12/8/16
CHKR.	Tim Gross	12/8/16
R.E.	Tim Gross	12/8/16
T.R.	Clay Slusmeyer	12/8/16
APPD.	Karen Sizemore	12/12/16
DRAWING APPROVALS		DATE

1	RAF			X	KAS	12/2/17
REV	DRW	CHKR	RE	TR	APPD	DATE

PRIORITY 3

C-765-A - ELECTRICAL SITE PLAN

0 15' 30' 60' 90'

REFERENCE DRAWINGS	DRAWING NO.

NO REPRESENTATION OR WARRANTY, EXPRESSED OR IMPLIED, IS MADE AS TO THE ACCURACY, COMPLETENESS OR USEFULNESS OF THE INFORMATION OR STATEMENTS CONTAINED IN THESE DRAWINGS, OR THAT THE USE OR DISCLOSURE OF ANY INFORMATION, APPARATUS, METHOD, OR PROCESS DISCLOSED IN THESE DRAWINGS MAY NOT INFRINGE PRIVATE RIGHTS OF OTHERS. NO LIABILITY IS ASSUMED WITH RESPECT TO THE USE OF, OR FOR DAMAGES RESULTING FROM THE USE OF ANY INFORMATION, APPARATUS, METHOD, OR PROCESS DISCLOSED IN THESE DRAWINGS. DRAWINGS MADE AVAILABLE FOR INFORMATION TO BIDDER ARE TO BE USED FOR OTHER PURPOSES AND ARE TO BE RETURNED UPON REQUEST OF THE FORWARDING CONTRACTOR.

SECTION NUMBER OR DETAIL LETTER
DRAWING ON WHICH SECTION OR DETAIL IS TAKEN
DRAWING ON WHICH SECTION OR DETAIL IS SHOWN
SECTION AND DETAIL KEY

LPE

STATE OF KENTUCKY
R. CLAY SLUSMEYER
23421
LICENSED PROFESSIONAL ENGINEER

R.C. Slusmeyer

DATE 10/2/2017
PROFESSIONAL SEAL

REV.	DATE	DESCRIPTION	DRAWN BY	DRAFT CHK	PROJ ENGR	LEAD ENGR	CONF CTRL/ NUCL SFTY	FAC MGR	E&TS MGR
1	—	AS BUILT ENTIRE DRAWING FOR ESO FA1951							
FA1	—	CERTIFIED FOR CONSTRUCTION FOR ESO FA1951							
0	12/8/16	ISSUED FOR CONSTRUCTION	KTW	RCS	JGH	RCS	JBJ	DLK	KAF

DRAWING REVISIONS

FLUOR. PADUCAH DEACTIVATION PROJECT
DOE Prime Contract #DE-DT0007774

U.S. DEPARTMENT OF ENERGY
PADUCAH, PORTSMOUTH PROJECT OPERATIONS,
PADUCAH GASEOUS DIFFUSION PLANT

LATA Environmental Services of Kentucky, LLC managed for the DEPARTMENT OF ENERGY under U.S. GOVERNMENT contract DE-AC30-10CC40020 Paducah, Kentucky

DOE CONTRACT NO. DE-AC30-10CC40020

PROJECT NAME:
NE PLUME OPTIMIZATION

TITLE:
C-765-A TREATMENT UNIT
ELECTRICAL SITE PLAN

EDCS CAD FILENAME	BUILDING	PLANT	CLASS
E7DC7650AA003 rev FA1.dwg	C-765-A	PGDP	U
SCALE: AS SHOWN	DRAWING NUMBER E7DC7650AA003		REV 1

LEGEND

- DISCONNECT SWITCH, FUSED, POLE MOUNTED
- LIGHTNING ARRESTER
- CIRCUIT BREAKER
- TRANSFORMER
- VFD — VARIABLE FREQUENCY DRIVE
- 25/34 — WELL PUMP (25 INDICATES HP RATING) (34 INDICATES FLA RATING)
- FUSE
- M — WATTHOUR METER W/ CT
- DISCONNECT SWITCH
- J — JUNCTION BOX
- NEW ELECTRICAL POWER POLE
- EXISTING OVERHEAD POWER
- E — E — PROPOSED OVERHEAD POWER
- UNDERGROUND DUCT BANK
- SURGE PROTECTION DEVICE (SPD); DEHN #999008C
- FIL — SINE WAVE FILTER

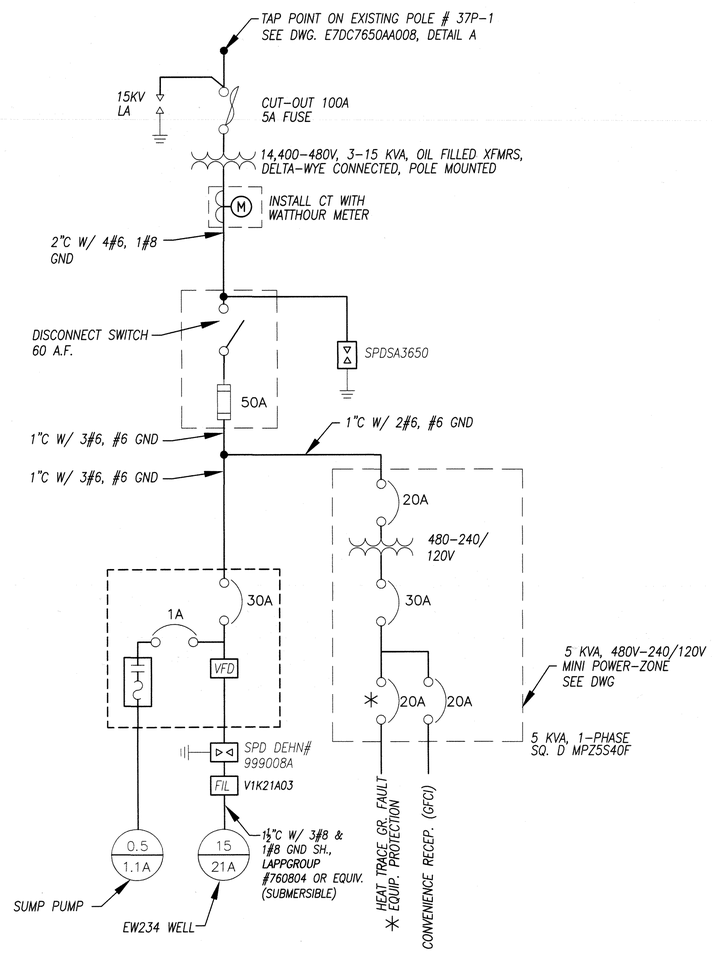

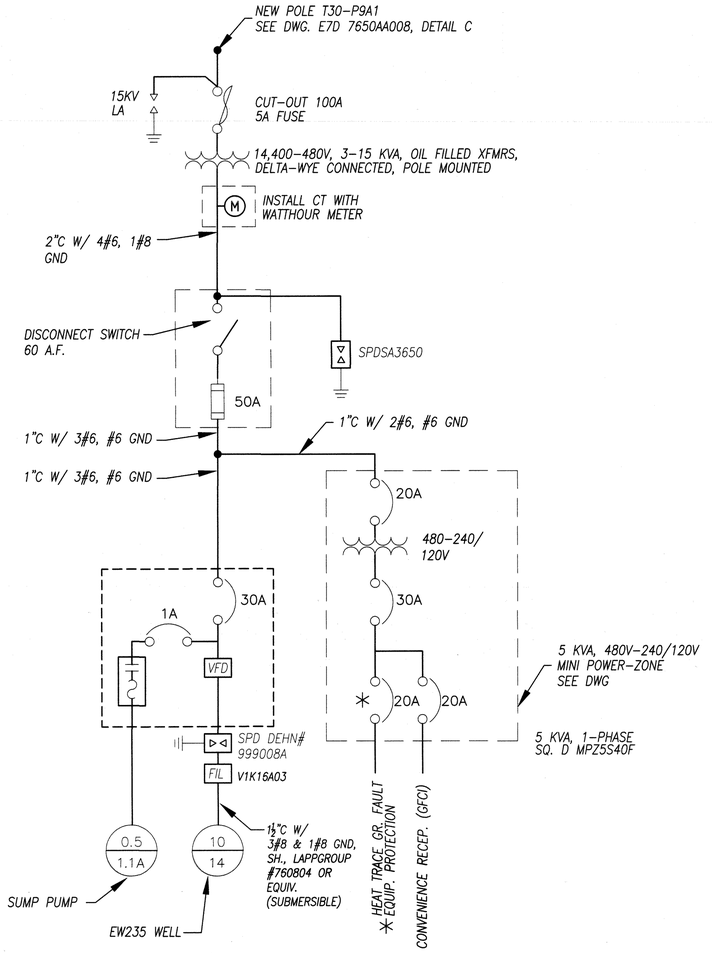

ONE-LINE DIAGRAM

SCALE: NONE

REV	DRW	CHKR	RE	TR	APPD	DATE
1	KTW	[illegible]	[illegible]	X	KAS	10/2/17

PRIORITY 3

REV.	FA2	
DRW.	Robin Flowers	5/2/17
CHKR.	Tim Gross	5/2/17
R.E.	Tim Gross	5/2/17
T.R.	N/A	N/A
APPD.	Karen Sizemore	5/3/17
DRAWING APPROVALS		DATE

LPE

STATE OF KENTUCKY — R. CLAY SLUSMEYER 23421 — LICENSED PROFESSIONAL ENGINEER

R.C. Slusmeyer

DATE 10/2/2017

PROFESSIONAL SEAL

REV.	DATE	DESCRIPTION	DRAWN BY	DRAFT CHK	ORG/ ENGR	LEAD ENGR	QA	CONF CTRL/ NUCL SFTY	FAC MGR	E&TS MGR
1	X	AS BUILT ENTIRE DRAWING FOR ESO FA1951	X	X	X	X	X	X	X	X
FA2	5/3/17	CERTIFIED FOR CONSTRUCTION FOR ESO FA1951 FOR ECR-2017-0003	X	X	X	X	X	X	X	X
FA1	12/12/16	CERTIFIED FOR CONSTRUCTION FOR ESO FA1951	RAF	TG	CS	TG	---		---	KAS
0	12/1/13	ISSUED FOR CONSTRUCTION	KTW	RCS	JGH	RCS	---	JBJ	DLK	KAF

DRAWING REVISIONS

FLUOR. PADUCAH DEACTIVATION PROJECT
DOE Prime Contract #DE-DT0007774

U.S. DEPARTMENT OF ENERGY
PADUCAH, PORTSMOUTH PROJECT OPERATIONS, PADUCAH GASEOUS DIFFUSION PLANT

LATA Environmental Services of Kentucky, LLC managed for the DEPARTMENT OF ENERGY under U.S. GOVERNMENT contract DE-AC30-10CC40020 Paducah, Kentucky

DOE CONTRACT NO. DE-AC30-10CC40020

PROJECT NAME: NE PLUME OPTIMIZATION

TITLE: ELECTRICAL ONE-LINE DIAGRAM – EXTRACTION WELLS EW234 AND EW235

EDCS CAD FILENAME	BUILDING	PLANT	CLASS
E7DC7650AA004 rev 1.dwg	AREA	PGDP	U

SCALE:	DRAWING NUMBER	REV
N/A	E7DC7650AA004	1

NO REPRESENTATION OR WARRANTY, EXPRESSED OR IMPLIED, IS MADE AS TO THE ACCURACY, COMPLETENESS OR USEFULNESS OF THE INFORMATION OR STATEMENTS CONTAINED IN THESE DRAWINGS, OR THAT THE USE OR DISCLOSURE OF ANY INFORMATION, APPARATUS, METHOD, OR PROCESS DISCLOSED IN THESE DRAWINGS MAY NOT INFRINGE PRIVATE RIGHTS OF OTHERS. NO LIABILITY IS ASSUMED WITH RESPECT TO THE USE OF, OR FOR DAMAGES RESULTING FROM THE USE OF ANY INFORMATION, APPARATUS, METHOD, OR PROCESS DISCLOSED IN THESE DRAWINGS. DRAWINGS MADE AVAILABLE FOR INFORMATION TO BIDDER ARE TO BE USED FOR OTHER PURPOSES AND ARE TO BE RETURNED UPON REQUEST OF THE FORWARDING CONTRACTOR.

SECTION NUMBER OR DETAIL LETTER — DRAWING ON WHICH SECTION OR DETAIL IS TAKEN — DRAWING ON WHICH SECTION OR DETAIL IS SHOWN

SECTION AND DETAIL KEY

REFERENCE DRAWINGS	DRAWING NO.

LEGEND

- DISCONNECT SWITCH, FUSED, POLE MOUNTED
- LIGHTNING ARRESTER
- CIRCUIT BREAKER
- TRANSFORMER
- VFD — VARIABLE FREQUENCY DRIVE
- 25/34 — WELL PUMP (25 INDICATES HP RATING) (34 INDICATES FLA RATING)
- FUSE
- M — WATTHOUR METER W/ CT
- DISCONNECT SWITCH
- J — JUNCTION BOX
- NEW ELECTRICAL POWER POLE
- EXISTING OVERHEAD POWER
- E — E — PROPOSED OVERHEAD POWER
- UNDERGROUND DUCT BANK

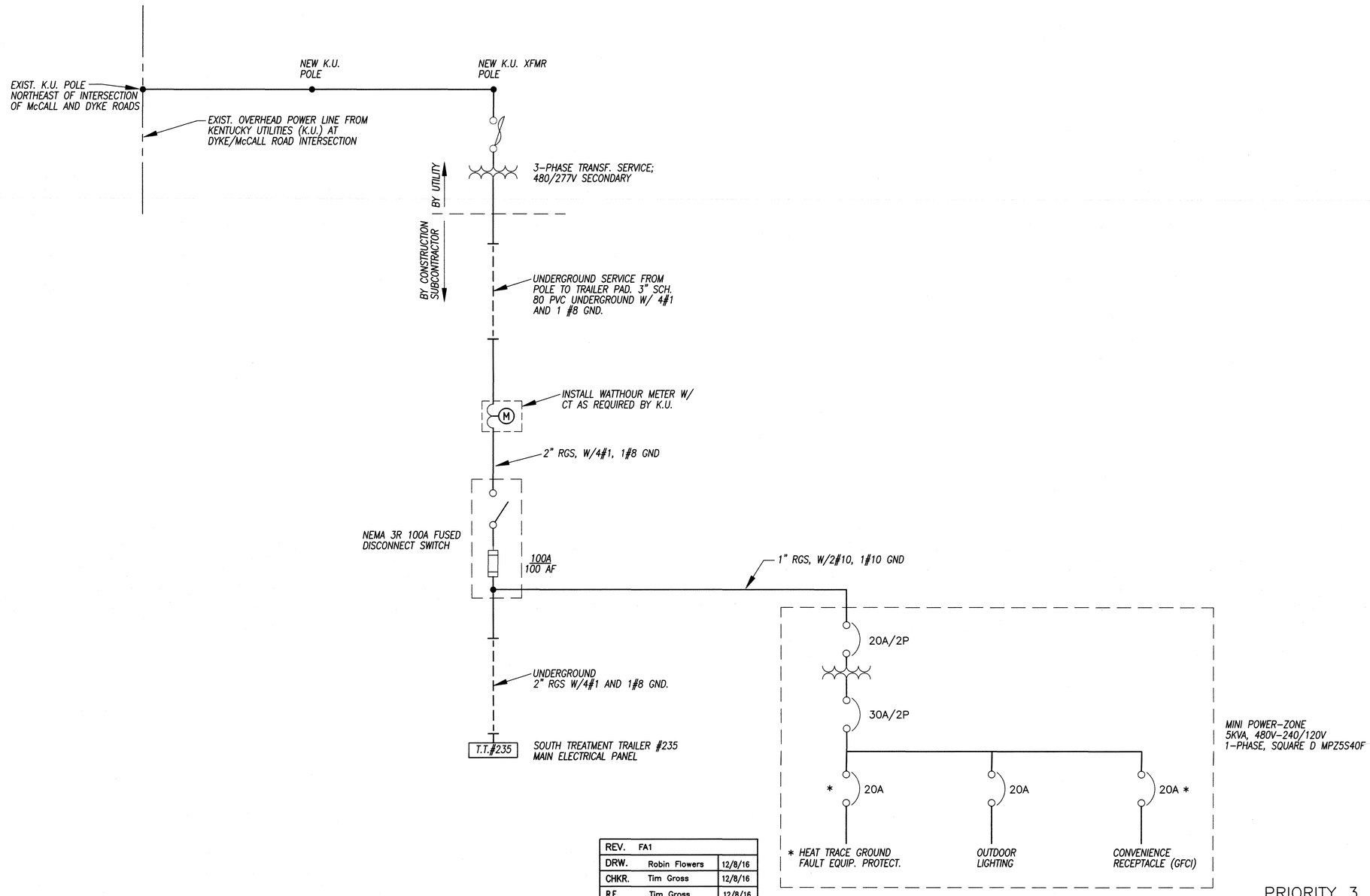

PRIORITY 3

REV.	FA1	
DRW.	Robin Flowers	12/8/16
CHKR.	Tim Gross	12/8/16
R.E.	Tim Gross	12/8/16
T.R.	Clay Slusmeyer	12/8/16
APPD.	Karen Sizemore	12/12/16
DRAWING APPROVALS		DATE

LPE

STATE OF KENTUCKY — R. CLAY SLUSMEYER 23421 — LICENSED PROFESSIONAL ENGINEER

R. C. Slusmeyer

DATE 10/3/2017

PROFESSIONAL SEAL

FLUOR. PADUCAH DEACTIVATION PROJECT
DOE Prime Contract #DE-DT0007774

REV.	DATE	DESCRIPTION	DRAWN BY	DRAFT CHK	ORG/ ENGR	LEAD ENGR	QA	CONF CTRL/ NUCL SFTY	FAC MGR	E&TS MGR
1	X	AS BUILT ENTIRE DRAWING FOR ESO FA1951								
FA1	12-12-16	CERTIFIED FOR CONSTRUCTION FOR ESO FA1951								
0	12/4/13	ISSUED FOR CONSTRUCTION	KTW	RCS	JGH	RCS	---	JBJ	DLA	KAS

DRAWING REVISIONS

U.S. DEPARTMENT OF ENERGY
PADUCAH, PORTSMOUTH PROJECT OPERATIONS, PADUCAH GASEOUS DIFFUSION PLANT

LATA Environmental Services of Kentucky, LLC — managed for the DEPARTMENT OF ENERGY under U.S. GOVERNMENT contract DE-AC30-10CC40020, Paducah, Kentucky

DOE CONTRACT NO. DE-AC30-10CC40020

PROJECT NAME: NE PLUME OPTIMIZATION

TITLE: ELECTRICAL ONE-LINE DIAGRAM SOUTH TRAILER TREATMENT UNIT #235

EDCS CAD FILENAME	BUILDING	PLANT	CLASS
E7DC7650AA005 rev FA1.dwg	C-765-A AREA	PGDP	U

SCALE:	DRAWING NUMBER	REV
N/A	E7DC7650AA005	1

REFERENCE DRAWINGS	DRAWING NO.

NO REPRESENTATION OR WARRANTY, EXPRESSED OR IMPLIED, IS MADE AS TO THE ACCURACY, COMPLETENESS OR USEFULNESS OF THE INFORMATION OR STATEMENTS CONTAINED IN THESE DRAWINGS, OR THAT THE USE OR DISCLOSURE OF ANY INFORMATION, APPARATUS, METHOD, OR PROCESS DISCLOSED IN THESE DRAWINGS MAY NOT INFRINGE PRIVATE RIGHTS OF OTHERS. NO LIABILITY IS ASSUMED WITH RESPECT TO THE USE OF, OR FOR DAMAGES RESULTING FROM THE USE OF ANY INFORMATION, APPARATUS, METHOD, OR PROCESS DISCLOSED IN THESE DRAWINGS. DRAWINGS MADE AVAILABLE FOR INFORMATION TO BIDDER ARE TO BE USED FOR OTHER PURPOSES AND ARE TO BE RETURNED UPON REQUEST OF THE FORWARDING CONTRACTOR.

SECTION NUMBER OR DETAIL LETTER — DRAWING ON WHICH SECTION OR DETAIL IS TAKEN — DRAWING ON WHICH SECTION OR DETAIL IS SHOWN

SECTION AND DETAIL KEY

REV	DRW	CHKR	RE	TR	APPD	DATE
1	BR	JA	KH	X	KAS	10/2/17

NAMEPLATE LEGEND		
DES	LETTERING	LETTER SIZE
A	(DS-XX) 480VAC, 100AMP FED FROM (XX)	1/4" 1/4" 1/4" 1/4"
B	PUMP VFD (VFD-XX)	1/4" 1/4"
C	(NOT USED)	1/4" 1/4"
D	TRANSFORMER (XFMR-XX)	1/4" 1/4"
E	POWER PANEL (PP-XX)	1/4" 1/4"

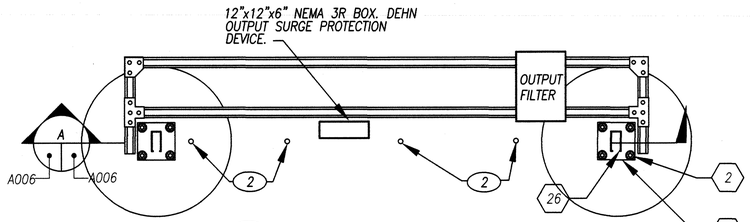

1 WELLHEAD RACK PAD, TYP
SCALE: NONE
E5E-0100-C002
E7DC7650AA002
A006

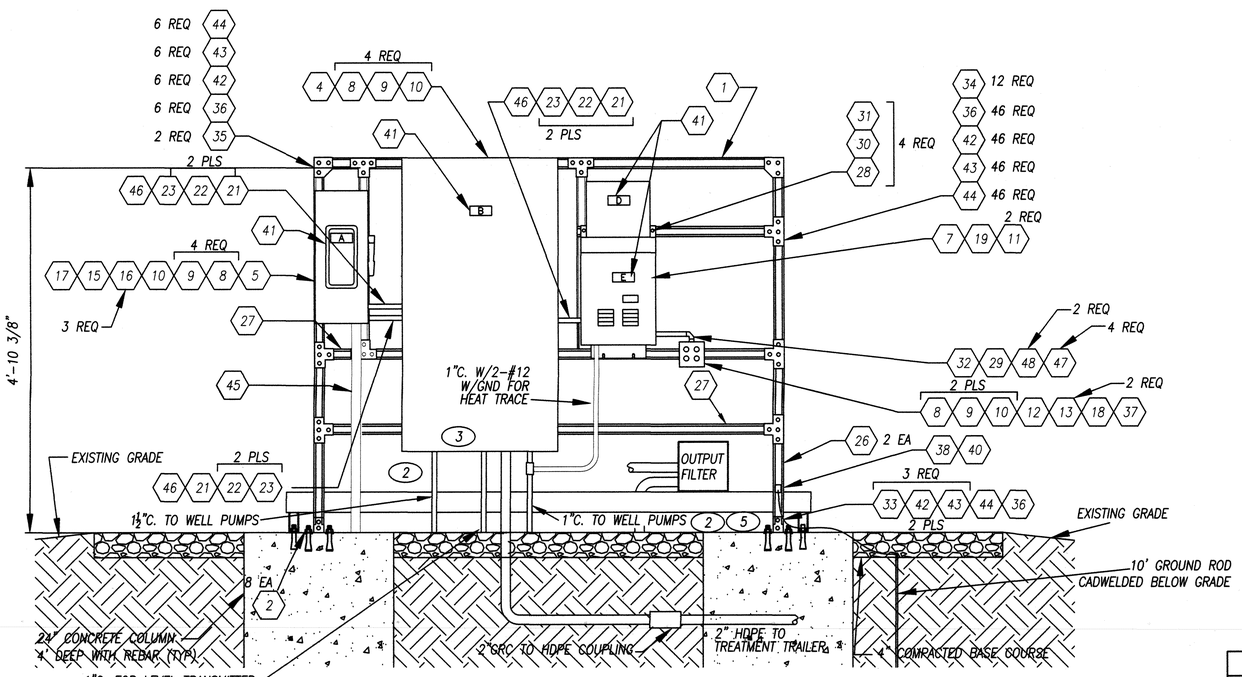

A WELLHEAD RACK, TYP
SCALE: NONE
E5E-0100-C002
E7DC7650AA002
A006

MATERIAL LIST CONT.

- 18 COVER, 2 GANG, DUPLEX, STAINLESS STEEL, PASS & SEYMOUR / SS82.
- 19 BREAKER, EPD, 20 AMP, 120 VAC, 1 POLE, SQUARE D / QO120EPD.
- 20 NOT USED.
- 21 CONDUIT, RIGID STEEL, 1", GALVANIZED, COM'L.
- 22 LOCKNUT, CONDUIT, 1".
- 23 BUSHING, INSULATED, STEEL 1".
- 24 CONTROL PANEL, (NOT USED).
- 25 (NOT USED).
- 26 FRAMING CHANNEL, BACK TO BACK 1-5/8"x3-1/4", B-LINE / B22A.
- 27 FRAMING CHANNEL, 1-5/8"x1-5/8", B-LINE / B22.
- 28 BOLT, HEX HEAD, 3/8"x1-1/2" L ,SST OR GALVANIZED, COM'L,/ 3/8"x1-1/2" HHCS.
- 29 CONDUIT, RIGID, 1/2", COM'L.
- 30 FLAT WASHER, 3/8" DIA. SST OR GALVAIZED, COM'L, 3/8"FW.
- 31 LOCK WASHER, 3/8" DIA. SST OR GALVAIZED, COM'L, 3/8"LW.
- (1) 32 WIRE, #12AWG, COPPER, STRAINED, THWN, COM'L.
- 33 POST BASE FOR B22-2PL, B-LINE / B281MSQ.
- 34 FOUR HOLE TEE PLATE, B-LINE / B133.
- 35 THREE HOLE CORNER PLATE, B-LINE / B140.
- 36 SPRING NUT, 1/2"x12, B-LINE / N226.
- 37 COVER, WEATHERPROOF, COM'L.
- 38 CADWELD FOR #4/0 AWG TO RACK ASSEMBLY STEEL.
- 39 NOT USED.
- 40 CONDUCTOR, #4/0, TINNED, BARE, COPPER, COM'L.
- 41 NAMEPLATE, LAMINATED PLASTIC, WHITE WITH BLACK CORE, ENGRAVED, SEE NAMEPLATE LEGEND.
- 42 BOLT, HEX HEAD, 1/2"x1 1/2"L SST OR GALVANIZED, COM'L,/ 1/2"x1-1/2" HHCS.
- 43 FLAT WASHER, 1/2" DIA. SST OR GALVANIZED, COM'L, / 1/2"xFW.
- 44 LOCK WASHER, 1/2" DIA. SST OR GALVANIZED, COM'L, / 1/2"xLW.
- 45 2" RGS C., 4#6 THWN, #8 GND FROM METER BASE AT POWER POLE
- (1) 46 WIRE, 3C#6AWG, COPPER, STRANDED, #8 GND THWN, COM'L.
- 47 LOCKNUT, CONDUIT, 1/2", REGAL / 801.
- 48 BUSHING, INSULATED, STEEL 1/2", GEDNEY / B50.
- 49 NOT USED.
- 50 NOT USED

GENERAL NOTES

1. ALL PARTS SHALL BE UL LISTED AND MAY BE SUBSTITUTED WITH LIKE PARTS THAT PERFORM THE SAME FORM, FIT AND FUNCTION.
2. ALL DIMENSIONS IN INCHES UNLESS OTHERWISE SPECIFIED.
3. IDENTIFICATION NUMBERS IN () SHALL BE PROVIDED BY INSTALLER AS PER CONTRACTOR NAMING CONVENTION
4. FOR WELLHEAD RACK PAD COORDINATES SEE DWG E5E-0100-C002 & E7DC7650AA002.

KEYED NOTES

1. USE APPROPRIATE WIRE INSULATION COLORS;
   BLACK-AC POWER (LABELED L1,L2,L3); SEE SPECIFICATIONS
   WHITE-NEUTRAL
   RED-CONTROL; SEE SPECIFICATIONS
   BLUE- CONTROL; SEE SPECIFICATIONS
2. CONDUIT SHALL BE STUBBED UP THROUGH CONCRETE PAD. COORDINATE STUB-UP LOCATIONS WITH RACK PLACEMENT & WELL PUMP ENTRIES.
3. REFER TO VENDOR INSTALLATION MANUALS & DWG E7DC7650AA025 FOR PROPER LOCATION AND MOUNTING OF VFD ENCLOSURE.
4. NOT USED.
5. FOR CONDUIT SIZE, CONDUCTOR SIZES AND NUMBER, SEE DWG E7DC7650AA009.

MATERIALS

DESCRIPTION, MATERIAL, VENDOR / PART NUMBER

- 1 WELLHEAD RACK ASSEMBLY.
- 2 KWIK BOLT 3 W/ 2-3/4" EMBEDMENT, STAINLESS STEEL, HILTI / 282551.
- 3 NOT USED
- 4 NEMA4 CABINET WITH CONFIGURED DRIVE, 480 VAC, 3 PH, 30HP, ALLEN-BRADLEY / PUMP DRIVE POWER FLEX 525.
- 5 DISCONNECT SWITCH, 60A, FUSED, NEMA 3R, 3 WIRE, 3 POLE, SERVICE RATED, SQUARE D / H362RB.
- 6 CONDUIT CLAMP, 1" CONDUIT, B-LINE / B2032.
- 7 MINI-POWER ZONE, 5KVA, 1-PHASE, 480VAC-240/120VAC, SQUARE D / MPZ5S40F.
- 8 SPRING NUT, 1/4"-20, FOR B22 CHANNEL, B-LINE / N224.
- 9 BOLT, HEX HEAD, 1/4"x1"L SST OR GAL CS, B-LINE / 1/4"x1"HHCS.
- 10 FLAT WASHER, 1/4" DIA. SST OR GAL CS, B-LINE / 1/4" FW.
- 11 BREAKER, GFCI, 20 AMP, 120VAC 1 POLE, SQUARE D / QO120GFI.
- 12 2 GANG DEEP BOX, WITH 1/2" THRD HOLES, PASS & SEYMOUR / MPZ5S40F.
- 13 RECEPTACLE, DUPLEX, 20A, 120VAC, PASS & SEYMOUR / 5362AI.
- 14 1 GANG DEEP BOX, WITH 1/2" THRD HOLES, PASS & SEYMOUR / WPBD23.
- 15 CLASS R FUSE KIT FOR DISCONNECT SWITCH, SQUARE D / RFK03H.
- 16 FUSE, 50A, TIME-DELAY, RK5 REJECTION, 600V, GOULD / TRS50R.
- 17 EQUIPMENT GROUNDING KIT, 30A, SQUARE D / GTK03C.

PRIORITY 3

REFERENCE DRAWINGS	DRAWING NO.

NO REPRESENTATION OR WARRANTY, EXPRESSED OR IMPLIED, IS MADE AS TO THE ACCURACY, COMPLETENESS OR USEFULNESS OF THE INFORMATION OR STATEMENTS CONTAINED IN THESE DRAWINGS, OR THAT THE USE OR DISCLOSURE OF ANY INFORMATION, APPARATUS, METHOD, OR PROCESS DISCLOSED IN THESE DRAWINGS MAY NOT INFRINGE PRIVATE RIGHTS OF OTHERS. NO LIABILITY IS ASSUMED WITH RESPECT TO THE USE OF, OR FOR DAMAGES RESULTING FROM THE USE OF ANY INFORMATION, APPARATUS, METHOD, OR PROCESS DISCLOSED IN THESE DRAWINGS. DRAWINGS MADE AVAILABLE FOR INFORMATION TO BIDDER ARE TO BE USED FOR OTHER PURPOSES AND ARE TO BE RETURNED UPON REQUEST OF THE FORWARDING CONTRACTOR.

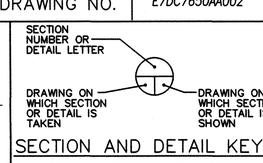

SECTION AND DETAIL KEY

REV	DRW	CHKR	RE	TR	APPD	DATE
1	KTW	[illegible]	[illegible]	X	KAS	10/2/17

REV. FA3	
DRW. R.FLOWERS	5/1/17
CHKR. T.GROSS	5/2/17
R.E. T.GROSS	5/2/17
T.R. N/A	
APPD. K.SIZEMORE	5/3/17
DRAWING APPROVALS	DATE

LPE

STATE OF KENTUCKY R. CLAY SLUSMEYER 23421 LICENSED PROFESSIONAL ENGINEER

R.C. Slusmeyer

DATE 10/2/2017

PROFESSIONAL SEAL

REV.	DATE	DESCRIPTION	DRAWN BY	DRAFT CHK	ORG/ ENGR	LEAD ENGR	QA		CONF CTRL/ NUCL SFTY	FAC MGR	E&TS MGR
1	X	AS-BUILT ENTIRE DRAWING FOR ESO FA1951. INC. ECN-2017-0016 AND ECR-2017-0003	X	X	X	X	X	X	X	X	X
FA3	X	CERTIFIED FOR CONSTRUCTION FOR ESO FA1951 FOR ECR-2017-0003	RF	TG	X	TG	X	X	X	KAS	X
FA2	4/12/17	CERTIFIED FOR CONSTRUCTION FOR ESO FA1951 PER ECN-2017-0016	KTW	TG	X	TG	X	X	X	KAS	X
FA1	12/12/16	CERTIFIED FOR CONSTRUCTION FOR ESO FA1951	RF	TG	X	TG	X	X	KAS	X	X
0	12/4/15	ISSUED FOR CONSTRUCTION	KTW	RCS	JCH	RCS	---	JBJ	DLA	KAS	

DRAWING REVISIONS

FLUOR. PADUCAH DEACTIVATION PROJECT
DOE Prime Contract #DE-DT0007774

U.S. DEPARTMENT OF ENERGY
PADUCAH, PORTSMOUTH PROJECT OPERATIONS, PADUCAH GASEOUS DIFFUSION PLANT

LATA Environmental Services of Kentucky, LLC — managed for the DEPARTMENT OF ENERGY under U.S. GOVERNMENT contract DE-AC30-10CC40020 Paducah, Kentucky

DOE CONTRACT NO. DE-AC30-10CC40020

PROJECT NAME: NE PLUME OPTIMIZATION

TITLE: EW #234 & #235 WELLHEAD RACK ASSEMBLY

EDCS CAD FILENAME	BUILDING	PLANT	CLASS
E7DC7650AA006rev1.dwg	C-765 AREA	PGDP	U

SCALE:	TYPE	DRAWING NUMBER	REV
N/A	A	E7DC7650AA006	1

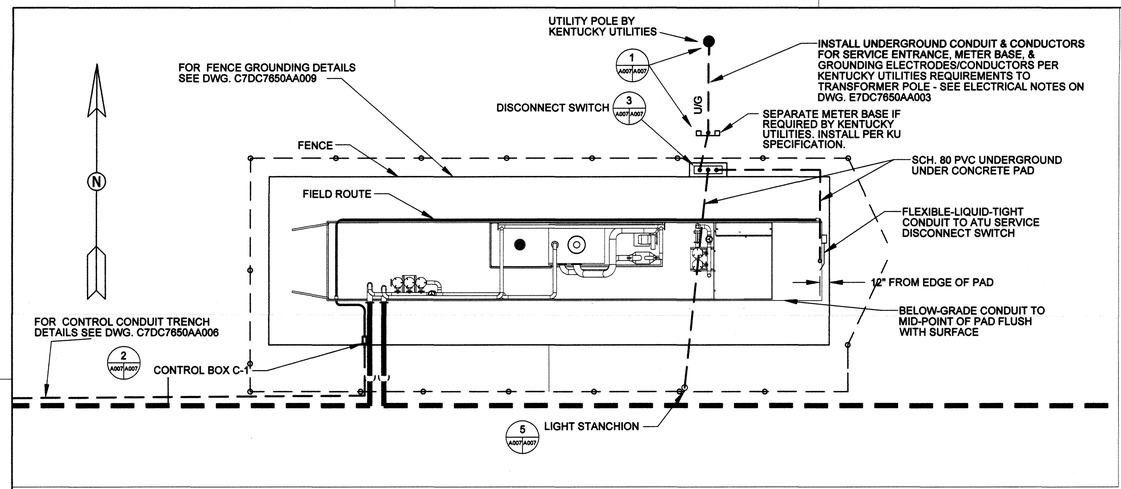

ELECTRICAL SERVICE LOCATION AT TRAILER TREATMENT SYSTEM

NOT TO SCALE

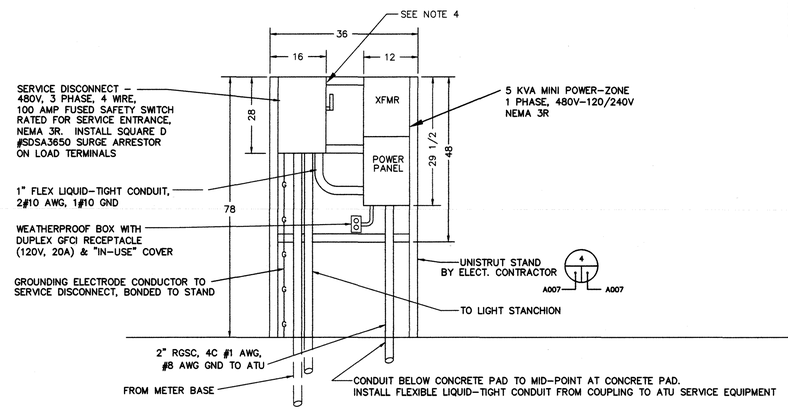

SERVICE DISCONNECT, POWER AND CONTROL PANELS AT EQUIPMENT PAD – FACING SOUTH

NO SCALE

ALL DIMENSIONS IN INCHES

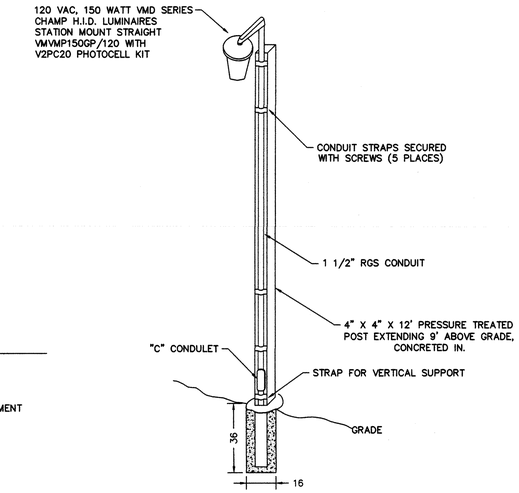

LIGHTING POLE DETAIL

NO SCALE

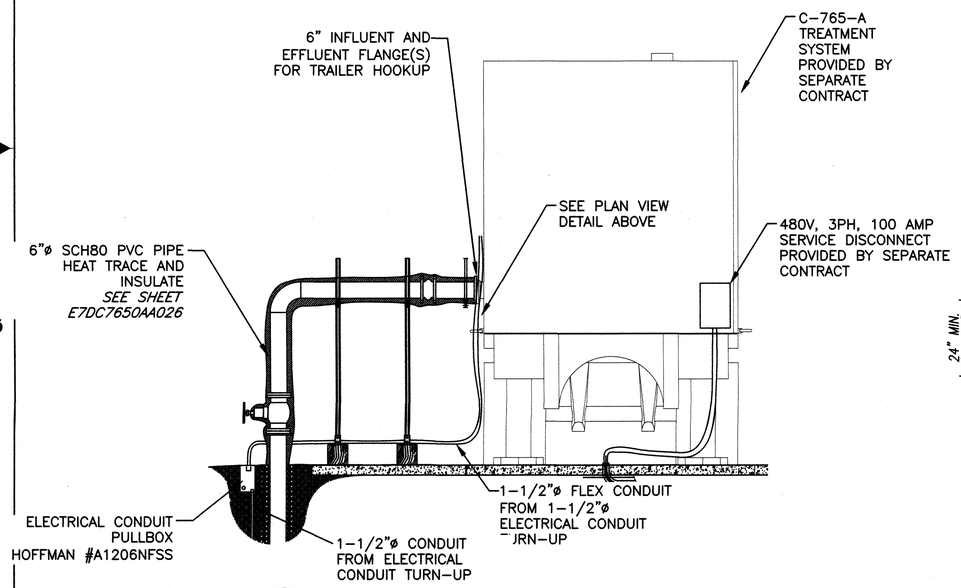

C-765-A CONTROL BOX/CONDUIT

SCALE: NTS

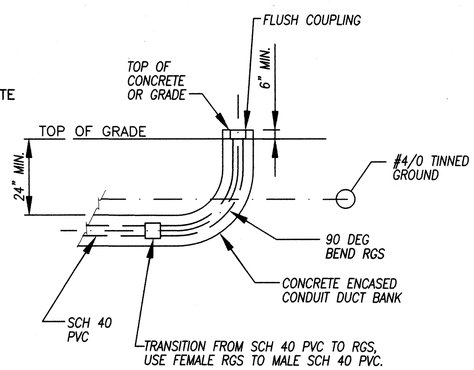

TYP DETAIL PIPING TRANSITION DETAIL FOR K.U. POLE AND METER BASE

SCALE: NONE

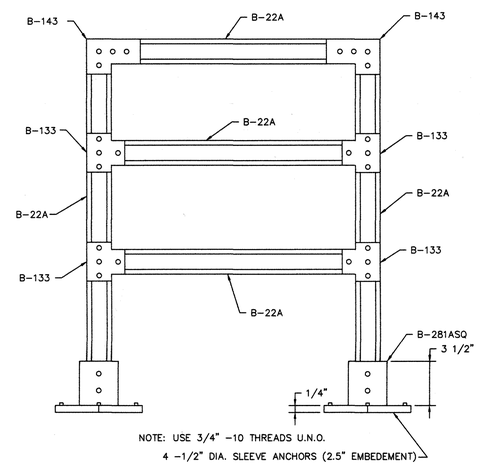

SERVICE DISCONNECT, POWER AND CONTROL PANEL STAND

NO SCALE

B-LINE PART #	IDENTIFICATION
B-22A	DOUBLE CHANNEL
B-101	90° FITTING
B-143	FLAT PLATE 90° FITTING
B-133	FLATE PLATE TEE FITTING
B-281ASQ	POST BASE

GENERAL NOTES ON PANEL SUPPORTS

1.) ALL MEMBERS SHALL BE 12 GAUGE STEEL

2.) ALL FITTINGS WILL BE FASTENED TO THE APPROPRIATE MEMBER USING A HEX-HEAD BOLT AND SPRING NUT. ALL BOLTS AND NUTS ARE ELECTRO-GALVANIZED, ASTM-B633, SC1 FINISH.

3.) ANCHOR BOLTS SHALL BE GALVANIZED ANKR-TITE BOLTS. MODEL #ATG1223.

3.) ANCHOR BOLTS SHALL BE GALVANIZED ANKR-TITE BOLTS. MODEL #ATG1223.

4.)INSTALL 480V, 3ø METER WITHIN NEMA 3R ENCLOSURE, SUCH THAT METER FACE IS EASILY READABLE/ACCESSIBLE.

EW235/234 & C-765-A DETAILS	C7DC7650AA006
ELECTRICAL UTILITY SITE PLAN	E7DC765DAAA003
REFERENCE DRAWINGS	DRAWING NO.

NO REPRESENTATION OR WARRANTY, EXPRESSED OR IMPLIED, IS MADE AS TO THE ACCURACY, COMPLETENESS OR USEFULNESS OF THE INFORMATION OR STATEMENTS CONTAINED IN THESE DRAWINGS, OR THAT THE USE OR DISCLOSURE OF ANY INFORMATION, APPARATUS, METHOD, OR PROCESS DISCLOSED IN THESE DRAWINGS MAY NOT INFRINGE PRIVATE RIGHTS OF OTHERS. NO LIABILITY IS ASSUMED WITH RESPECT TO THE USE OF, OR FOR DAMAGES RESULTING FROM THE USE OF ANY INFORMATION, APPARATUS, METHOD, OR PROCESS DISCLOSED IN THESE DRAWINGS. DRAWINGS MADE AVAILABLE FOR INFORMATION TO BIDDER ARE TO BE USED FOR OTHER PURPOSES AND ARE TO BE RETURNED UPON REQUEST OF THE FORWARDING CONTRACTOR.

SECTION NUMBER OR DETAIL LETTER — DRAWING ON WHICH SECTION OR DETAIL IS TAKEN — DRAWING ON WHICH SECTION OR DETAIL IS SHOWN

SECTION AND DETAIL KEY

REV.	FA2	
DRW.	Robin Flowers	12/8/16
CHKR.	Tim Gross	12/8/16
R.E.	Tim Gross	12/8/16
T.R.	Clay Slusmeyer	12/8/16
APPD.	Karen Sizemore	12/12/16
DRAWING APPROVALS		DATE

REV	DRW	CHKR	RE	TR	APPD	DATE
1	BR	KJH	KJH	X	KAS	10/2/17

PRIORITY 3

LPE

STATE OF KENTUCKY — R. CLAY SLUSMEYER 23421 — LICENSED PROFESSIONAL ENGINEER

R.C. Slusmeyer

DATE 10/2/2017

PROFESSIONAL SEAL

FLUOR. PADUCAH DEACTIVATION PROJECT DOE Prime Contract #DE-DT0007774

REV.	DATE	DESCRIPTION	DRAWN BY	DRAFT CHK	PROJ ENGR	LEAD ENGR	CONF CTRL/ NUCL SFTY	FAC MGR	E&TS MGR
1	X	AS-BUILT ENTIRE DRAWING FOR ESO FA1951							
FA2	X	CERTIFIED FOR CONSTRUCTION FOR ESO FA1951 PER ECN-2017-0016	X	X	X	X	X	X	X
FA1	12/12/16	CERTIFIED FOR CONSTRUCTION FOR ESO FA1951	RF	TG	X	TG	—	X	KAS
0	12/4/13	ISSUED FOR CONSTRUCTION	KTW	RCS	JGH	RCS	JBJ	DLA	KAF

DRAWING REVISIONS

U.S. DEPARTMENT OF ENERGY
PADUCAH, PORTSMOUTH PROJECT OPERATIONS, PADUCAH GASEOUS DIFFUSION PLANT

LATA Environmental Services of Kentucky, LLC — managed for the DEPARTMENT OF ENERGY under U.S. GOVERNMENT contract DE-AC30-10CC40020 Paducah, Kentucky

DOE CONTRACT NO. DE-AC30-10CC40020

PROJECT NAME: NE PLUME OPTIMIZATION

TITLE: NE PLUME INTERIM REMEDIAL ACTION OPTIMIZATION TREATMENT TRAILER #235 ELECTRICAL UTILITY DETAILS

EDCS CAD FILENAME	BUILDING	PLANT	CLASS
E7DC7650AA007revFA2.dwg	C-765-A	PGDP	U

SCALE:	TYPE	DRAWING NUMBER	REV
AS NOTED	P	E7DC7650AA007	1

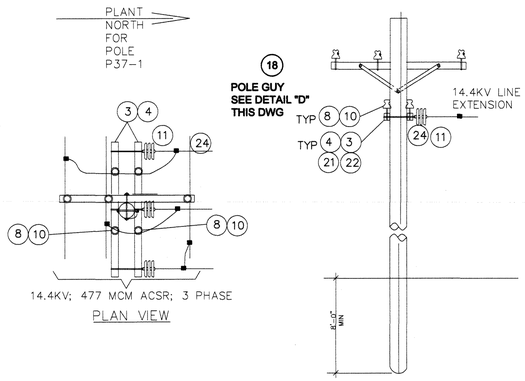

WEST ELEVATION FOR EXISTING POLE P37-1

POLE DETAIL "A"
NO SCALE

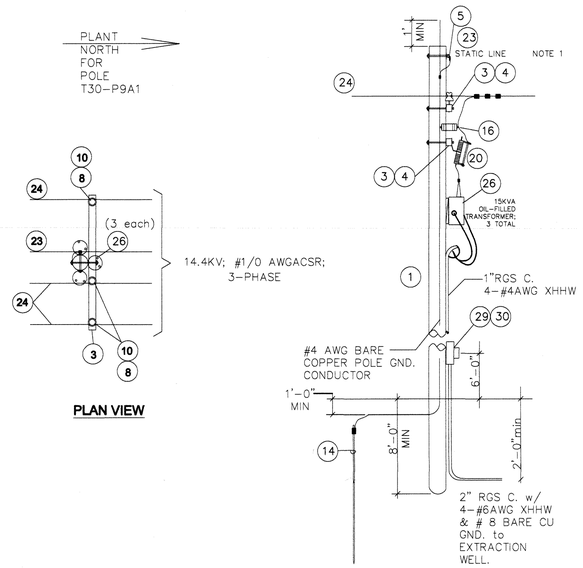

POLE DETAIL "C"
NO SCALE

ELEVATION FOR NEW POLE T30-P9A1

GENERAL NOTES FOR POLE INSTALLATION

1. MATCH HEIGHT BETWEEN STATIC LINES ON NEW POLE.
2. ALL NEW POLES TO HAVE COIL TYPE GROUND, PLUS GROUNDING RODS WHERE REQUIRED AT TRANSFORMER POLES.
3. ALL PARTS AS SPECIFIED OR ENGINEER'S APPROVED EQUAL.
4. SUPPLY AND INSTALL 480V POWER METERING WITHIN A SEPARATE NEMA 3R ENCLOSURE, SUCH THAT METER FACE IS EASILY VISIBLE AND ACCESSIBLE.
5. MISC HARDWARE (NUTS, BOLTS, WASHERS, ETC.) ARE NOT SHOWN.
6. ENSURE THAT GROUNDING WIRE ON UPPER POLE AND CROSSARM ASSEMBLY IS SEPARATED FROM NEARBY CONTACT WITH METAL BRACKETS TO PREVENT BIRDS FROM CONTACTING BOTH HOT AND GROUND SIMULTANEOUSLY.

POLE HARDWARE MATERIAL LIST

1. POLE, 60 FT, CLASS 2, CCA TREATED
2. THIMBLE FOR 3/8" STEEL STRAND, CHANCE # 6593
3. CROSSARM, 3-1/2"X4-1/2"X8'-0"
4. CROSSARM BRACE, 5'-3" LONG X 1'-6" DROP, GALVANIZED, CHANCE #5466
5. CLAMP, GROUND WIRE, USED TO ATTACH STATIC WIRE TO EYEBOLT, CHANCE #5450
6. EYE BOLT, OVAL EYE TYPE FOR STATIC WIRE, 14" LONG X 5/8" DIA. WITH ONE SQUARE NUT, ADDITIONAL NUTS AND WASHERS AS REQUIRED, CHANCE #29964
7. CLAMP FOR GUY WIRE, 3 BOLT-2 PLATE TYPE, CHANCE #6449
8. PINS FOR MOUNTING INSULATORS, 1" DIA. LEAD THREAD, FORGED STEEL, GALVANIZED
9. PINS FOR PIN TYPE INSULATORS, ½" LAG SCREW TYPE, CHANCE #875
10. INSULATORS, PIN TYPE, 14.4KV, GLAZED PORCELAIN, CHANCE #C905-1305
11. INSULATORS, DEAD-END TYPE, 6-1/4", CHANCE #C907-1604, 2 PER PHASE
12. CLAMP, DEAD-END FOR 266.8 ACSR CONDUCTOR, U-BOLT TYPE
13. CLAMP, CABLE SUSPENSION FOR MESSENGER
14. 3/4" X 10'-0" GROUND ROD, "CADWELD" BELOW GRADE
15. NOT USED
16. SURGE ARRESTER, DIRECT CONNECTED, 15KV, RISER POLE TYPE, METAL-OXIDE VALVE, WITH CROSSARM MOUNTING HARDWARE
17. TERMINATOR, 15KV, #2 AWG CONDUCTOR SIZE, SIZED TO FIT OVER INSULATION DIAMETER
18. FOR POLE GUYS REFER TO DETAIL "D" THIS DWG.
19. CABLE SUPPORT, CONDUIT TOP, OUTDOOR, WATERTIGHT, SEAL WITH FILLING COMPOUND
20. FUSED CUTOUT, 15KV, 200AMPS, 18,000 AMPS IC, WITH CROSSARM MOUNTING HARDWARE AND CURRENT LIMITING FUSES, 15KV RATED HUBBELL K-MATE 80 (1 PER PHASE) OR EQUIVALENT.
21. EYE NUT, 5/8" BOLT DIA., JOSLYN #J1092
22. BOLTS, DOUBLE ARMING, SQUARE NUTS, 5/8" DIA. X 20", JOSLYN #J8870
23. 3/8" GALVANIZED STEEL STATIC WIRE MINIMUM, OR #4 ACSR
24. PRIMARY CONDUCTORS, 3-PHASE, #1/0 AWG ACSR
25. POLE, 65 FT, CLASS 2, CCA TREATED TO ALLOW FOR MATCHING HEIGHT OF STATIC BAYONET ON POLE T30-P9A.
26. POLE MT'D TRANSFORMER, 3-EACH, OIL-FILLED, 15KVA, SINGLE-PHASE, 14.4KV 2 BUSHING PRIMARY, 480/277 VOLT SECONDARY
27. NOT USED
28. NOT USED
29. CURRENT TRANSFORMER FOR METERING 480V RATED, 200:5 AMPS.
30. METER & NEMA 3R METER BASE, KW/KWH, 5 AMP, 480 VOLTS, WITH C.T.s AS REQUIRED

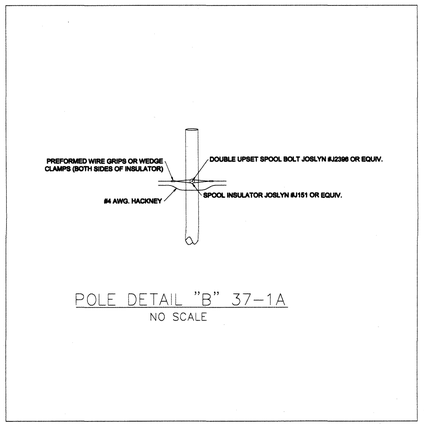

POLE DETAIL "B" 37-1A
NO SCALE

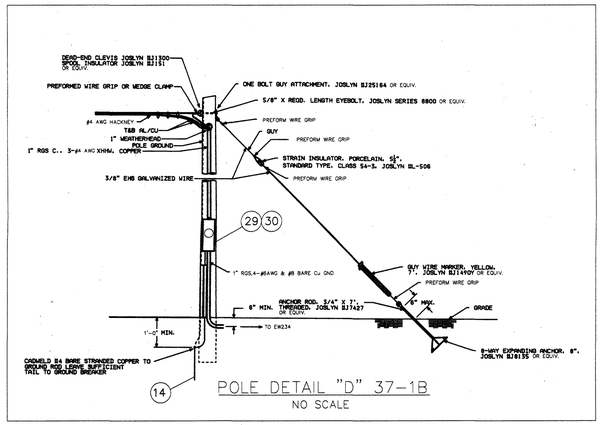

POLE DETAIL "D" 37-1B
NO SCALE

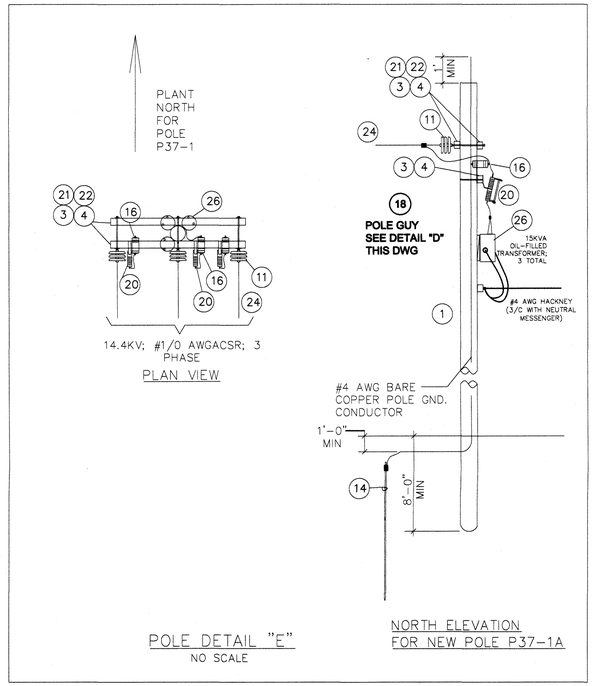

POLE DETAIL "E"
NO SCALE

NORTH ELEVATION FOR NEW POLE P37-1A

PRIORITY 3

NO REPRESENTATION OR WARRANTY, EXPRESSED OR IMPLIED, IS MADE AS TO THE ACCURACY, COMPLETENESS OR USEFULNESS OF THE INFORMATION OR STATEMENTS CONTAINED IN THESE DRAWINGS, OR THAT THE USE OR DISCLOSURE OF ANY INFORMATION, APPARATUS, METHOD, OR PROCESS DISCLOSED IN THESE DRAWINGS MAY NOT INFRINGE PRIVATE RIGHTS OF OTHERS. NO LIABILITY IS ASSUMED WITH RESPECT TO THE USE OF, OR FOR DAMAGES RESULTING FROM THE USE OF ANY INFORMATION, APPARATUS, METHOD, OR PROCESS DISCLOSED IN THESE DRAWINGS. DRAWINGS MADE AVAILABLE FOR INFORMATION TO BIDDER ARE TO BE USED FOR OTHER PURPOSES AND ARE TO BE RETURNED UPON REQUEST OF THE FORWARDING CONTRACTOR.

SECTION NUMBER OR DETAIL LETTER
DRAWING ON WHICH SECTION OR DETAIL IS TAKEN
DRAWING ON WHICH SECTION OR DETAIL IS SHOWN

SECTION AND DETAIL KEY

REV.	FA1	
DRW.	Robin Flowers	12/8/16
CHKR.	Tim Gross	12/8/16
R.E.	Tim Gross	12/8/16
T.R.	Clay Slusmeyer	12/8/16
APPD.	Karen Sizemore	12/12/16
DRAWING APPROVALS		DATE

REV	DRW	CHKR	RE	TR	APPD	DATE
1	BR	KA	KW	X	KAS	10/2/17

LPE

STATE OF KENTUCKY R. CLAY SLUSMEYER 23421 LICENSED PROFESSIONAL ENGINEER

R.C. Slusmeyer

DATE 10/2/2017

PROFESSIONAL SEAL

REV.	DATE	DESCRIPTION	DRAWN BY	DRAFT CHK	ORG/ ENGR	LEAD ENGR	QA	CONF CTRL/ NUCL SFTY	FAC MGR	E&TS MGR
1	XXX	AS BUILT ENTIRE DRAWING FOR ESO FA1951	XXX	XXX	XXX	XXX	XXX	—	XXX	XXX	XXX
FA1	XXX	CERTIFIED FOR CONSTRUCTION FOR ESO FA1951	XXX	XXX	XXX	XXX	XXX	—	XXX	XXX	XXX
0	12/4/13	ISSUED FOR CONSTRUCTION	KTW	RCS	JGH	RCS	—	JBJ	DLA	KAF

DRAWING REVISIONS

FLUOR. PADUCAH DEACTIVATION PROJECT
DOE Prime Contract #DE-DT0007774

U.S. DEPARTMENT OF ENERGY
PADUCAH, PORTSMOUTH PROJECT OPERATIONS, PADUCAH GASEOUS DIFFUSION PLANT

LATA Environmental Services of Kentucky, LLC
managed for the DEPARTMENT OF ENERGY under U.S. GOVERNMENT contract DE-AC30-10CC40020
Paducah, Kentucky

DOE CONTRACT NO. DE-AC30-10CC40020

PROJECT NAME:
NE PLUME OPTIMIZATION

TITLE:
ELECTRICAL POLE DETAILS

EDCS CAD FILENAME	BUILDING	PLANT	CLASS
E7DC7650AA008 rev 1.dwg	C-765-A	PGDP	U

SCALE:	DRAWING NUMBER	REV
N/A	E7DC7650AA008	1

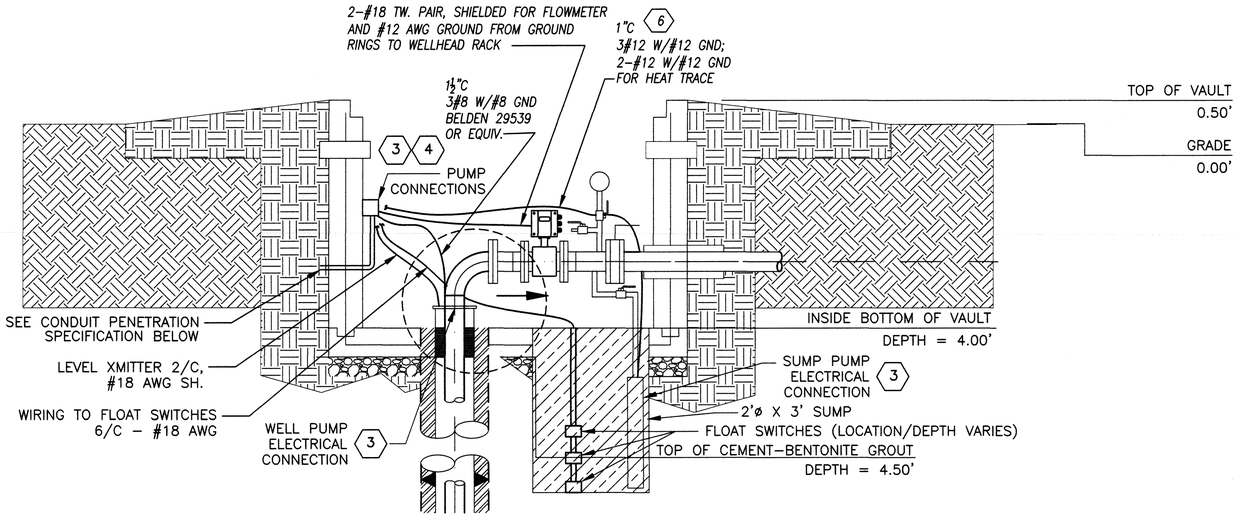

WELL VAULT DETAIL

(EW234 & EW235)

A — E5E–0100–C002/A002 — A009

DETAIL

SCALE: NONE

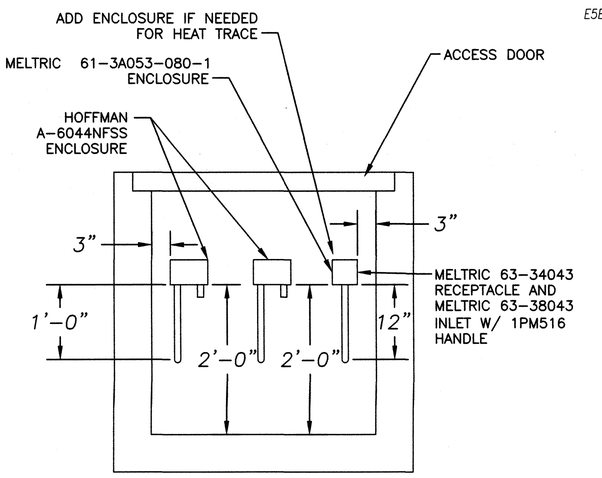

WELL VAULT DETAIL

SCALE: 1" = 12"

(SCALE FOR DRAWING FROM 22" X 34")

0 6" 12" 18" 24"

B — C5E–FA1950–A07 — A009

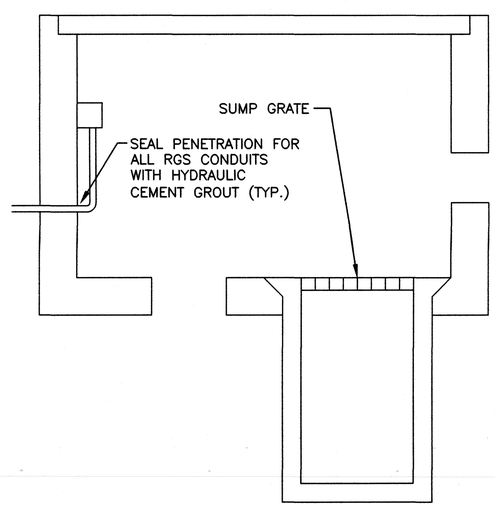

C — C5E–FA1950–A07 — A009

WELL VAULT DETAIL

SCALE: 1" = 12"

(SCALE FOR DRAWING FROM 22" X 34")

0 6" 12" 18" 24"

A — A009 — A006

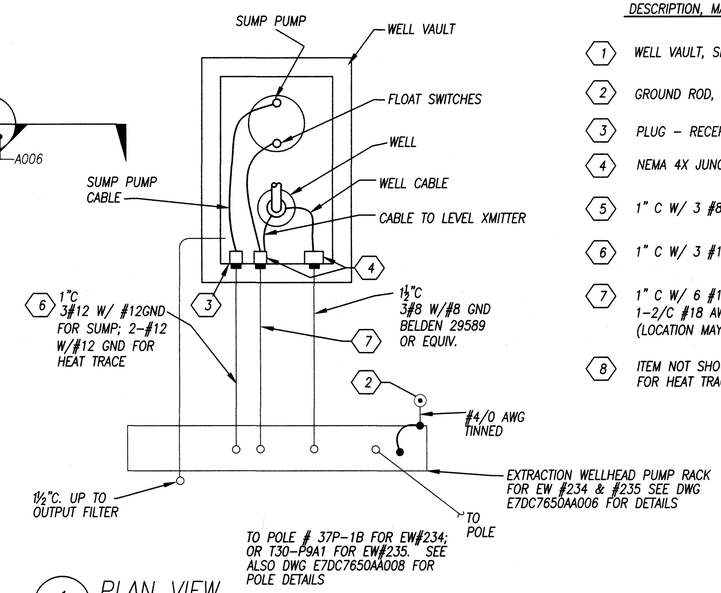

PLAN VIEW

SCALE: NONE

1 — E5E–0100–C002/A002 — A009

GENERAL NOTES

1. ALL PARTS AS SPECIFIED OR ENGINEER APPROVED "OR EQUAL".
2. HEAT TRACE TO BE INSTALLED FROM NEW FLOWMETER CONNECTION, SUMP AND CHECK VALVE. SEE E7DC7650AA026 FOR HEAT TRACE DETAILS – INSTALL AMBIENT SENSING THERMOSTAT.

MATERIALS

DESCRIPTION, MATERIAL, VENDOR / PART NUMBER

(1) WELL VAULT, SEE DWG C7DC7650AA007

(2) GROUND ROD, 10', COPPERWELD, CADWELD TO GROUND ROD & RACK.

(3) PLUG – RECEPTACLE ASSEMBLY WITH CORD GRIPS, WATERTIGHT.

(4) NEMA 4X JUNCTION BOX,.

(5) 1" C W/ 3 #8 AND 1 #10 GND,.

(6) 1" C W/ 3 #12 AND 1 #12 GND, AND 2 #12 AND 1 #12 GND.

(7) 1" C W/ 6 #18 AWG TO FLOAT SWITCHES AND 1–2/C #18 AWG SH. TO LEVEL TRANSMITTER. (LOCATION MAY VARY)

(8) ITEM NOT SHOWN FOR CLARITY. SEE DRAWING E7DC7650AA026 FOR HEAT TRACE.

REV	DRW	CHKR	RE	TR	APPD	DATE
I	BR	[illegible]	[illegible]	X	KAS	10/2/17

PRIORITY 3

REV.	FA3	
DRW.	R.FLOWERS	5/3/17
CHKR.	T.GROSS	5/3/17
R.E.	T.GROSS	5/3/17
T.R.	N/A	
APPD.	K.SIZEMORE	5/3/17
DRAWING APPROVALS		DATE

FLUOR. PADUCAH DEACTIVATION PROJECT
DOE Prime Contract #DE-DT0007774

U.S. DEPARTMENT OF ENERGY
PADUCAH, PORTSMOUTH PROJECT OPERATIONS, PADUCAH GASEOUS DIFFUSION PLANT

LATA Environmental Services of Kentucky, LLC — managed for the DEPARTMENT OF ENERGY under U.S. GOVERNMENT contract DE–AC30–10CC40020 Paducah, Kentucky

DOE CONTRACT NO. DE–AC30–10CC40020

PROJECT NAME: NE PLUME OPTIMIZATION

TITLE: ELECTRICAL DETAILS EW #234 & EW #235

EDCS CAD FILENAME	BUILDING	PLANT	CLASS
E7DC7650AA009 rev1.dwg	C–765 AREA	PGDP	U

SCALE:	TYPE	DRAWING NUMBER	REV
N/A	S	E7DC7650AA009	1

REFERENCE DRAWINGS	DRAWING NO.

NO REPRESENTATION OR WARRANTY, EXPRESSED OR IMPLIED, IS MADE AS TO THE ACCURACY, COMPLETENESS OR USEFULNESS OF THE INFORMATION OR STATEMENTS CONTAINED IN THESE DRAWINGS, OR THAT THE USE OR DISCLOSURE OF ANY INFORMATION, APPARATUS, METHOD, OR PROCESS DISCLOSED IN THESE DRAWINGS MAY NOT INFRINGE PRIVATE RIGHTS OF OTHERS. NO LIABILITY IS ASSUMED WITH RESPECT TO THE USE OF, OR FOR DAMAGES RESULTING FROM THE USE OF ANY INFORMATION, APPARATUS, METHOD, OR PROCESS DISCLOSED IN THESE DRAWINGS. DRAWINGS MADE AVAILABLE FOR INFORMATION TO BIDDER ARE TO BE USED FOR OTHER PURPOSES AND ARE TO BE RETURNED UPON REQUEST OF THE FORWARDING CONTRACTOR.

SECTION NUMBER OR DETAIL LETTER — DRAWING ON WHICH SECTION OR DETAIL IS TAKEN — DRAWING ON WHICH SECTION OR DETAIL IS SHOWN

SECTION AND DETAIL KEY

LPE

STATE OF KENTUCKY — R. CLAY SLUSMEYER 23421 — LICENSED PROFESSIONAL ENGINEER

R. C. Slusmeyer

DATE 10/2/2017

PROFESSIONAL SEAL

REV.	DATE	DESCRIPTION	DRAWN BY	DRAFT CHK	ORG/ ENGR	LEAD ENGR	QA	CONF CTRL/ NUCL SFTY	FAC MGR	E&TS MGR
1	X	AS–BUILT ENTIRE DRAWING FOR ESO FA1951, INC. ECR–2017–0003	X	X	X	X	X	X	X	X
FA2	X	CERTIFIED FOR CONSTRUCTION FOR ESO FA1951 FOR ECR–2017–0003	RAF	TG	X	TG	X	X	X	KAS
FA1	12/12/16	CERTIFIED FOR CONSTRUCTION FOR ESO FA1951	RAF	TG	CS	TG	--	--	--	KAS
0	12/4/13	ISSUED FOR CONSTRUCTION	KTW	RCS	JGH	RCS	--	JBJ	DLA	KAF

DRAWING REVISIONS

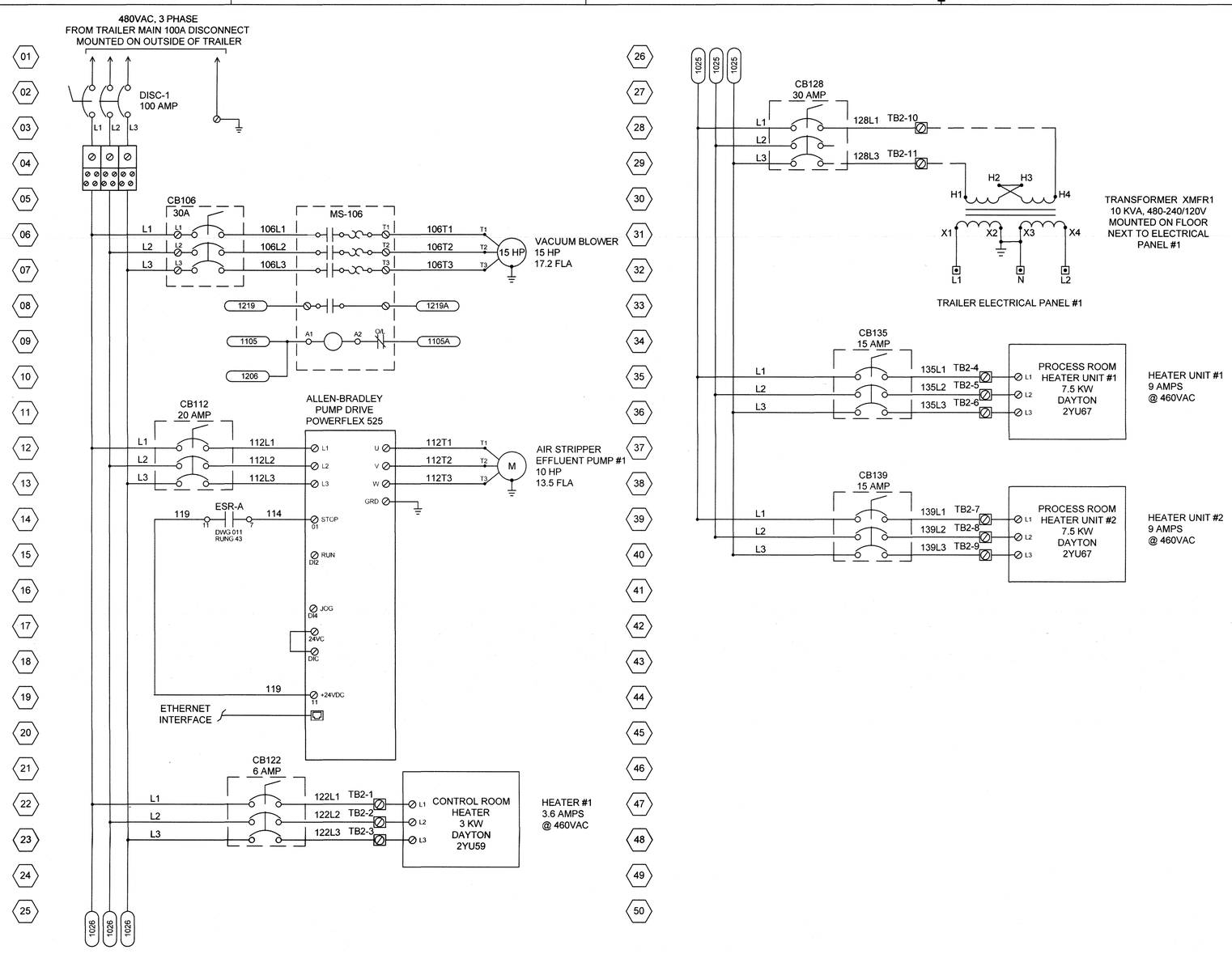

REV.	FA1	
DRW.	ROBIN FLOWERS	12/8/16
CHKR.	JOE BLAGG	12/8/16
R.E.	JOE BLAGG	12/8/16
T. R.	P.L.SPEES	12/9/16
APPD.	KAREN SIZEMORE	12/12/16
DRAWING APPROVALS		DATE

PRIORITY 3

1	KTW	JWB	JWB	N/A	KAS	10/2/17
REV	DRW	CHKR	RE	TR	APPD	DATE

FLUOR. PADUCAH DEACTIVATION PROJECT
DOE Prime Contract #DE-DT0007774

U.S. DEPARTMENT OF ENERGY
PADUCAH, PORTSMOUTH PROJECT OPERATIONS,
PADUCAH GASEOUS DIFFUSION PLANT

LATA Environmental Services of Kentucky, LLC managed for the DEPARTMENT OF ENERGY under U.S. GOVERNMENT contact DE-AC30-10CC40020 Paducah, Kentucky

DOE CONTRACT NO. DE-AC30-10CC40020

PROJECT NAME:
NE PLUME OPTIMIZATION

TITLE:
C-765
480 V SCHEMATICS

EDCS CAD FILENAME	BUILDING	PLANT	CLASS
E7DC7650AA010rev1.dwg	C-765	PDGP	U

SCALE:	DRAWING NUMBER	REV
N/A	E7DC7650AA010	1

LPE

STATE OF KENTUCKY
PHILIP LYNN SPEES
13543
LICENSED PROFESSIONAL ENGINEER

P. L. Spees 10-2-17

DATE:

PROFESSIONAL SEAL

REV.	DATE	DESCRIPTION	DRAWN BY	DRAFT CHK	PROJ ENGR	LEAD ENGR	CONF CTRL/ NUCL SFTY	FAC MGR	E&TS MGR
1	X	AS-BUILT ENTIRE DRAWING FOR ESO FA1951	X	X	X	X	X	X	X
FA1	X	CERTIFIED FOR CONSTRUCTION FOR ESO FA1951	X	X	X	X	X	X	X
0	11/28/13	ISSUED FOR CONSTRUCTION	TL	TH	BN	TS		DLC	KAF

DRAWING REVISIONS

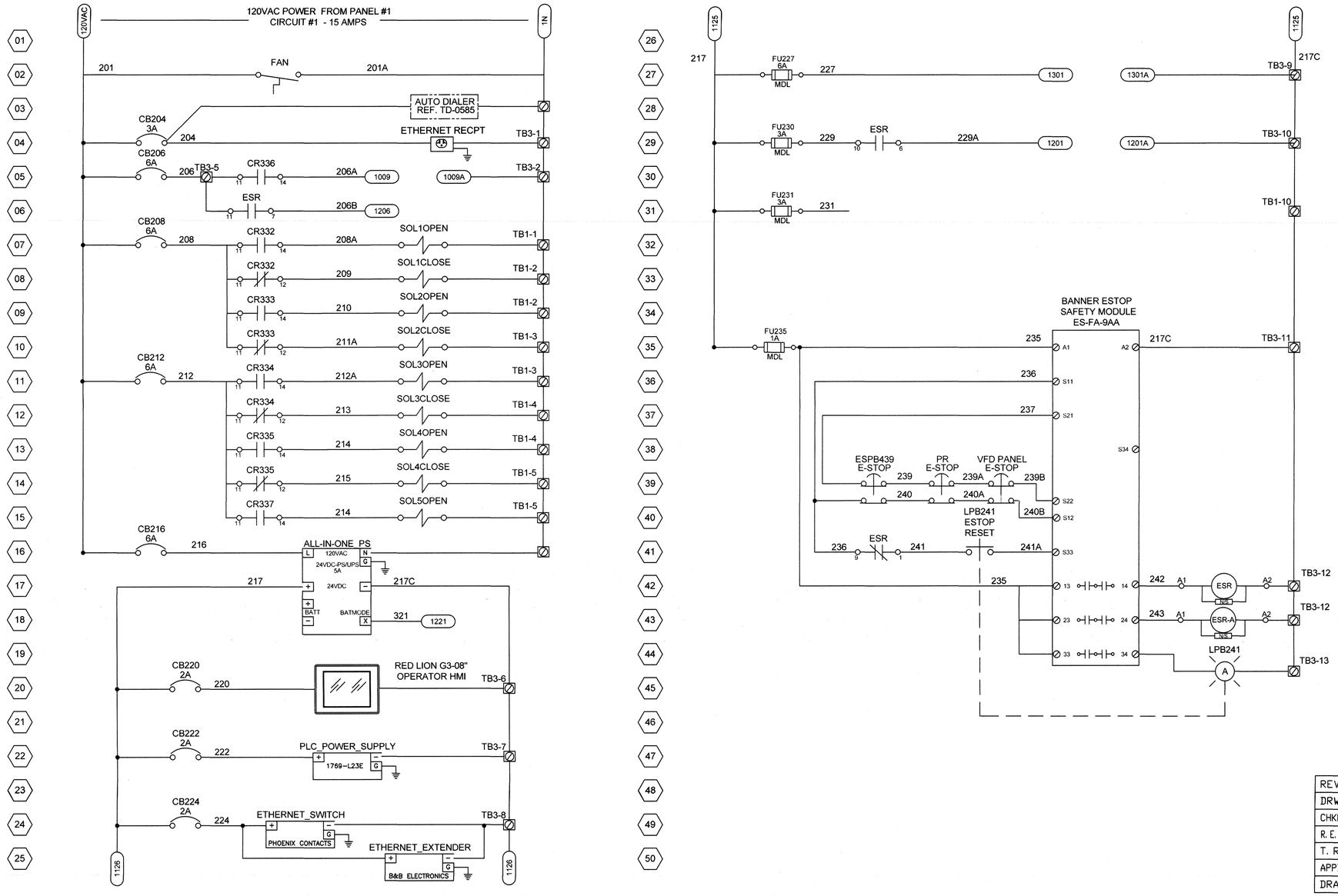

REV.	FA1	
DRW.	ROBIN FLOWERS	12/8/16
CHKR.	JOE BLAGG	12/8/16
R.E.	JOE BLAGG	12/8/16
T. R.	P.L.SPEES	12/9/16
APPD.	KAREN SIZEMORE	12/12/16
DRAWING APPROVALS		DATE

PRIORITY 3

REV	DRW	CHKR	RE	TR	APPD	DATE
1	KTW	GWB	GWB	—	KAS	10/9/17

FLUOR. PADUCAH DEACTIVATION PROJECT
DOE Prime Contract #DE-DT0007774

U.S. DEPARTMENT OF ENERGY
PADUCAH, PORTSMOUTH PROJECT OPERATIONS,
PADUCAH GASEOUS DIFFUSION PLANT

LATA Environmental Services of Kentucky, LLC managed for the DEPARTMENT OF ENERGY under U.S. GOVERNMENT contact DE-AC30-10CC40020 Paducah, Kentucky

DOE CONTRACT NO. DE-AC30-10CC40020

PROJECT NAME:
NE PLUME OPTIMIZATION

TITLE:
C-765
120 VAC SCHEMATICS

EDCS CAD FILENAME	BUILDING	PLANT	CLASS
E7DC7650AA011 rev1.dwg	C-765	PDGP	U

SCALE:	DRAWING NUMBER	REV
N/A	E7DC7650AA011	1

LPE

STATE OF KENTUCKY
PHILIP LYNN SPEES
13543
LICENSED
PROFESSIONAL ENGINEER

P.L. Spees 10-9-17
DATE:
PROFESSIONAL SEAL

REV.	DATE	DESCRIPTION	DRAWN BY	DRAFT CHK	PROJ ENGR	LEAD ENGR	CONF CTRL/ NUCL SFTY	FAC MGR	E&TS MGR
1	X	AS-BUILT ENTIRE DRAWING FOR ESO FA1951	X	X	X	X	X	X	X
FA1	X	CERTIFIED FOR CONSTRUCTION FOR ESO FA1951	X	X	X	X	X	X	X
0	11/26/13	ISSUED FOR CONSTRUCTION	TC	TH	BK	TS		DLC	KAF

DRAWING REVISIONS

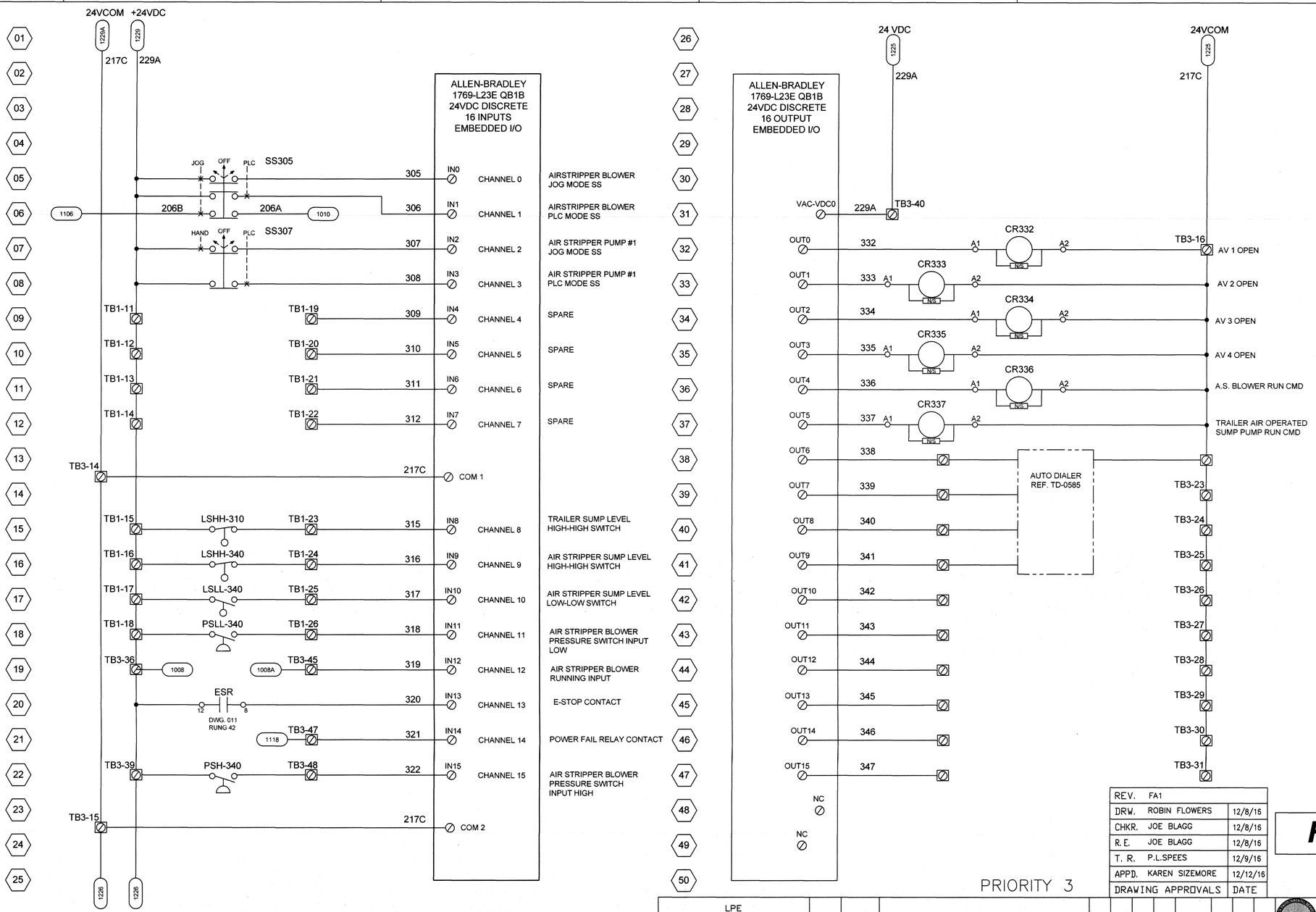

REV	DRW	CHKR	RE	TR	APPD	DATE
1	KTW	JWB	JWB	—	KAS	10/9/17

PRIORITY 3

DRAWING APPROVALS		DATE
REV.	FA1	
DRW.	ROBIN FLOWERS	12/8/16
CHKR.	JOE BLAGG	12/8/16
R.E.	JOE BLAGG	12/8/16
T. R.	P.L.SPEES	12/9/16
APPD.	KAREN SIZEMORE	12/12/16

FLUOR. PADUCAH DEACTIVATION PROJECT
DOE Prime Contract #DE-DT0007774

U.S. DEPARTMENT OF ENERGY
PADUCAH, PORTSMOUTH PROJECT OPERATIONS,
PADUCAH GASEOUS DIFFUSION PLANT

LATA Environmental Services of Kentucky, LLC managed for the DEPARTMENT OF ENERGY under U.S. GOVERNMENT contact DE-AC30-10CC40020 Paducah, Kentucky

DOE CONTRACT NO. DE-AC30-10CC40020

PROJECT NAME:
NE PLUME OPTIMIZATION

TITLE:
C-765
DISCRETE I/O SCHEMATICS

LPE

STATE OF KENTUCKY
PHILIP LYNN SPEES
13543
LICENSED PROFESSIONAL ENGINEER

P. L. Spees 10-9-17

DATE:
PROFESSIONAL SEAL

REV.	DATE	DESCRIPTION	DRAWN BY	DRAFT CHK	PROJ ENGR	LEAD ENGR	CONF CTRL/ NUCL SFTY	FAC MGR	E&TS MGR
1	X	AS-BUILT ENTIRE DRAWING FOR ESO FA1951	X	X	X	X	X	X	X
FA1	X	CERTIFIED FOR CONSTRUCTION FOR ESO FA1951	X	X	X	X	X	X	X
0	11/26/13	ISSUED FOR CONSTRUCTION	TC	TH	BK	TS		DLC	KAF

DRAWING REVISIONS

EDCS CAD FILENAME	BUILDING	PLANT	CLASS
E7DC7650AA012 rev1.dwg	C-765	PDGP	U

SCALE:	DRAWING NUMBER	REV
N/A	E7DC7650AA012	1

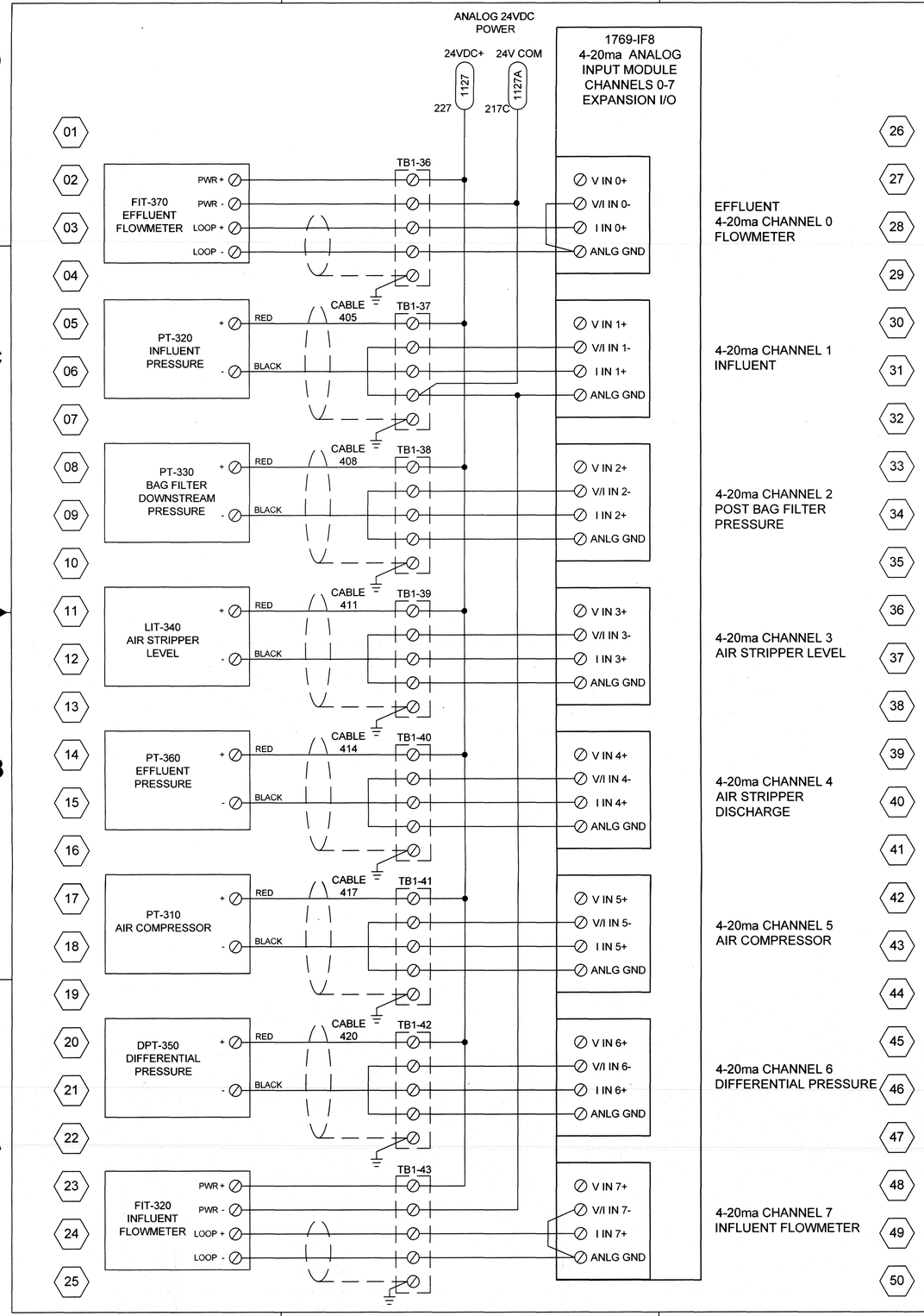

REV	DRW	CHKR	RE	TR	APPD	DATE
1	KTW	GWB	GWB	—	KAS	10/3/17

PRIORITY 3

REV.	FA1	
DRW.	ROBIN FLOWERS	12/8/16
CHKR.	JOE BLAGG	12/8/16
R.E.	JOE BLAGG	12/8/16
T.R.	P.L.SPEES	12/9/16
APPD.	KAREN SIZEMORE	12/12/16
DRAWING APPROVALS		DATE

LPE

STATE OF KENTUCKY — PHILIP LYNN SPEES 13543 — LICENSED PROFESSIONAL ENGINEER

P. L. Spees 10-2-17

DATE:

PROFESSIONAL SEAL

REV.	DATE	DESCRIPTION	DRAWN BY	DRAFT CHK	PROJ ENGR	LEAD ENGR	CONF CTRL/ NUCL SFTY	FAC MGR	E&TS MGR
1	X	AS-BUILT ENTIRE DRAWING FOR ESO FA1951	X	X	X	X	X	X	X
FA1	X	CERTIFIED FOR CONSTRUCTION FOR ESO FA1951	X	X	X	X	X	X	X
0	11/26/13	ISSUED FOR CONSTRUCTION	TL	TH	BN	TS	—	DLC	KAF

DRAWING REVISIONS

FLUOR.

PADUCAH DEACTIVATION PROJECT
DOE Prime Contract #DE-DT0007774

U.S. DEPARTMENT OF ENERGY
PADUCAH, PORTSMOUTH PROJECT OPERATIONS,
PADUCAH GASEOUS DIFFUSION PLANT

LATA Environmental Services of Kentucky, LLC managed for the DEPARTMENT OF ENERGY under U.S. GOVERNMENT contact DE-AC30-10CC40020 Paducah, Kentucky

DOE CONTRACT NO. DE-AC30-10CC40020

PROJECT NAME:
NE PLUME OPTIMIZATION

TITLE:
C-765
ANALOG SCHEMATICS

EDCS CAD FILENAME	BUILDING	PLANT	CLASS
E7DC7650AA013 rev1.dwg	C-765	PDGP	U

SCALE:	DRAWING NUMBER	REV
N/A	E7DC7650AA013	1

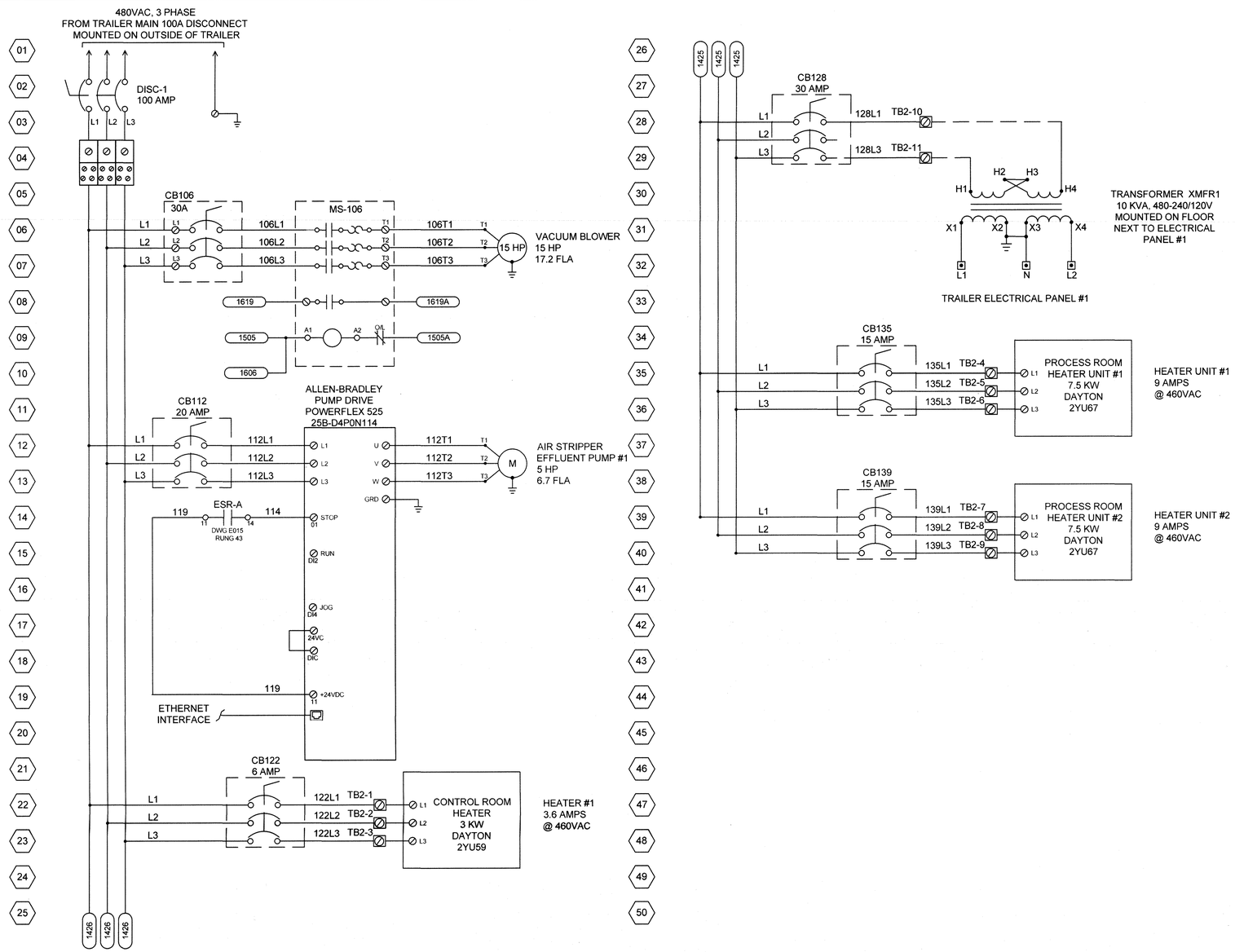

PRIORITY 3

REV.	FA1	
DRW.	ROBIN FLOWERS	12/8/15
CHKR.	JOE BLAGG	12/8/15
R.E.	JOE BLAGG	12/8/15
T. R.	P.L.SPEES	12/9/15
APPD.	KAREN SIZEMORE	12/12/15
DRAWING APPROVALS		DATE

REV	DRW	CHKR	RE	TR	APPD	DATE
1	KEW	JWB	JWB	—	KAS	10/2/17

FLUOR.

PADUCAH DEACTIVATION PROJECT
DOE Prime Contract #DE-DT0007774

U.S. DEPARTMENT OF ENERGY
PADUCAH, PORTSMOUTH PROJECT OPERATIONS,
PADUCAH GASEOUS DIFFUSION PLANT

LATA Environmental Services of Kentucky, LLC managed for the DEPARTMENT OF ENERGY under U.S. GOVERNMENT contact DE-AC30-10CC40020 Paducah, Kentucky

DOE CONTRACT NO. DE-AC30-10CC40020

PROJECT NAME:
NE PLUME OPTIMIZATION

TITLE:
C-765-A
480 V SCHEMATIC

EDCS CAD FILENAME	BUILDING	PLANT	CLASS
E7DC7650AA014 rev1.dwg	C-765	PDGP	U

SCALE:	DRAWING NUMBER	REV
N/A	E7DC7650AA014	1

LPE

STATE OF KENTUCKY
PHILIP LYNN SPEES
13543
LICENSED PROFESSIONAL ENGINEER

P. L. Spees 10-2-17

DATE:

PROFESSIONAL SEAL

REV.	DATE	DESCRIPTION	DRAWN BY	DRAFT CHK	PROJ ENGR	LEAD ENGR	CONF CTRL/ NUCL SFTY	FAC MGR	E&TS MGR
1	X	AS-BUILT ENTIRE DRAWING FOR ESO FA1951	X	X	X	X	X	X	X
FA1	X	CERTIFIED FOR CONSTRUCTION FOR ESO FA1951	X	X	X	X	X	X	X
0	11/28/13	ISSUED FOR CONSTRUCTION	TL	HH	BK	TS	—	DLC	KAF

DRAWING REVISIONS

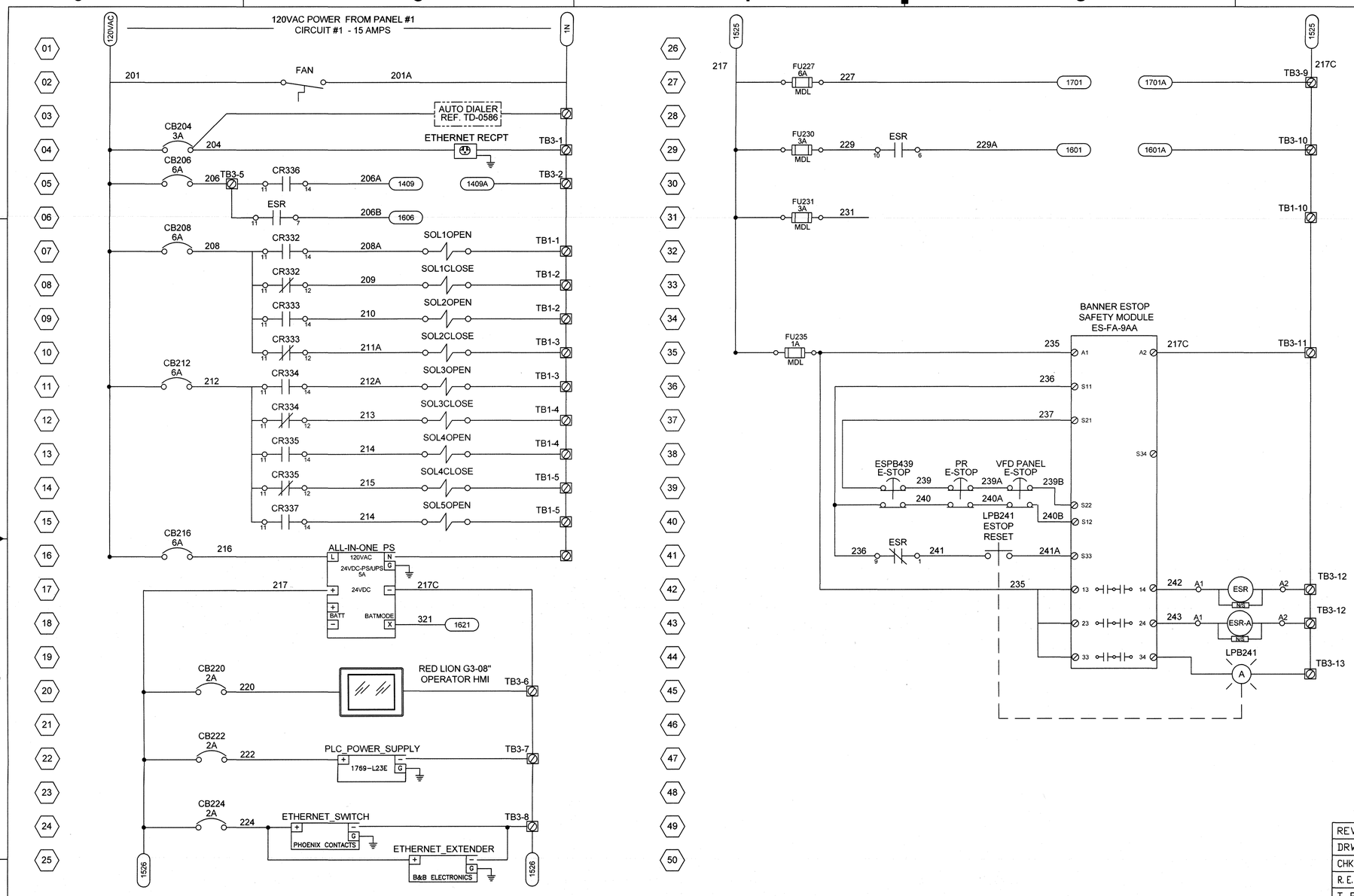

REV.	FA1	
DRW.	ROBIN FLOWERS	12/8/16
CHKR.	JOE BLAGG	12/8/16
R.E.	JOE BLAGG	12/8/16
T. R.	P.L.SPEES	12/9/16
APPD.	KAREN SIZEMORE	12/12/16
DRAWING APPROVALS		DATE

REV	DRW	CHKR	RE	TR	APPD	DATE
1	KTW	JWB	JWB	—	KAS	10/9/17

FLUOR. PADUCAH DEACTIVATION PROJECT
DOE Prime Contract #DE-DT0007774

U.S. DEPARTMENT OF ENERGY
PADUCAH, PORTSMOUTH PROJECT OPERATIONS,
PADUCAH GASEOUS DIFFUSION PLANT

PRIORITY 3

LPE

STATE OF KENTUCKY
PHILIP LYNN SPEES
13543
LICENSED
PROFESSIONAL ENGINEER

P. L. Spees 10-9-17
DATE:
PROFESSIONAL SEAL

REV.	DATE	DESCRIPTION	DRAWN BY	DRAFT CHK	PROJ ENGR	LEAD ENGR	CONF CTRL/ NUCL SFTY	FAC MGR	E&TS MGR
1	X	AS-BUILT ENTIRE DRAWING FOR ESO FA1951	X	X	X	X	X	X	X
FA1	X	CERTIFIED FOR CONSTRUCTION FOR ESO FA1951	X	X	X	X	X	X	X
0	11/26/13	ISSUED FOR CONSTRUCTION	TL	TH	SK	TS	—	DLC	KAF

DRAWING REVISIONS

LATA Environmental Services of Kentucky, LLC managed for the DEPARTMENT OF ENERGY under U.S. GOVERNMENT contact DE-AC30-10CC40020 Paducah, Kentucky

DOE CONTRACT NO. DE-AC30-10CC40020

PROJECT NAME:
NE PLUME OPTIMIZATION

TITLE:
C-765-A
120 VAC SCHEMATICS

EDCS CAD FILENAME	BUILDING	PLANT	CLASS
E7DC7650AA015 rev1	C-765	PDGP	U

SCALE:	DRAWING NUMBER	REV
N/A	E7DC7650AA015	1

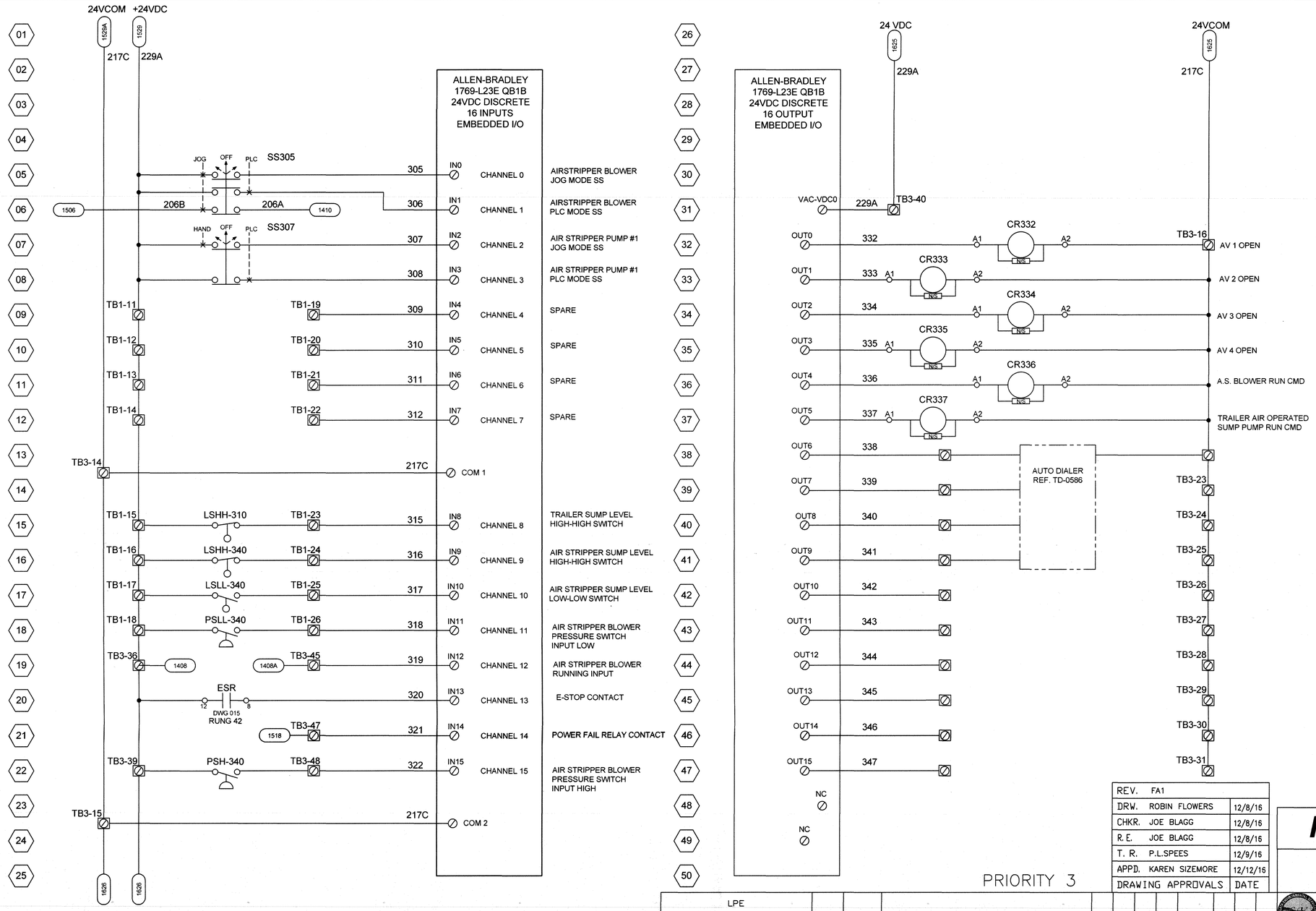

PRIORITY 3

REV.	FA1	
DRW.	ROBIN FLOWERS	12/8/16
CHKR.	JOE BLAGG	12/8/16
R.E.	JOE BLAGG	12/8/16
T. R.	P.L.SPEES	12/9/16
APPD.	KAREN SIZEMORE	12/12/16
DRAWING APPROVALS		DATE

REV	DRW	CHKR	RE	TR	APPD	DATE
1	KTW	JLB	JLB	—	KAS	10/9/17

FLUOR.

PADUCAH DEACTIVATION PROJECT
DOE Prime Contract #DE-DT0007774

U.S. DEPARTMENT OF ENERGY
PADUCAH, PORTSMOUTH PROJECT OPERATIONS,
PADUCAH GASEOUS DIFFUSION PLANT

LATA Environmental Services of Kentucky, LLC managed for the DEPARTMENT OF ENERGY under U.S. GOVERNMENT contact DE-AC30-10CC40020 Paducah, Kentucky

DOE CONTRACT NO. DE-AC30-10CC40020

PROJECT NAME:
NE PLUME OPTIMIZATION

TITLE:
C-765-A
DISCRETE I/O SCHEMATICS

EDCS CAD FILENAME	BUILDING	PLANT	CLASS
E7DC7650AA016 rev1.dwg	C-765	PDGP	U

SCALE:	DRAWING NUMBER	REV
N/A	E7DC7650AA016	1

LPE

STATE OF KENTUCKY
PHILIP LYNN SPEES
13543
LICENSED PROFESSIONAL ENGINEER

P. L. Spees 10-9-17
DATE:
PROFESSIONAL SEAL

REV.	DATE	DESCRIPTION	DRAWN BY	DRAFT CHK	PROJ ENGR	LEAD ENGR	CONF CTRL/ NUCL SFTY	FAC MGR	E&TS MGR
1	X	AS-BUILT ENTIRE DRAWING FOR ESO FA1951	X	X	X	X	X	X	X
FA1	X	CERTIFIED FOR CONSTRUCTION FOR ESO FA1951	X	X	X	X	X	X	X
0	11/28/13	ISSUED FOR CONSTRUCTION	TK	TH	BK	TS	—	DLC	KAF

DRAWING REVISIONS

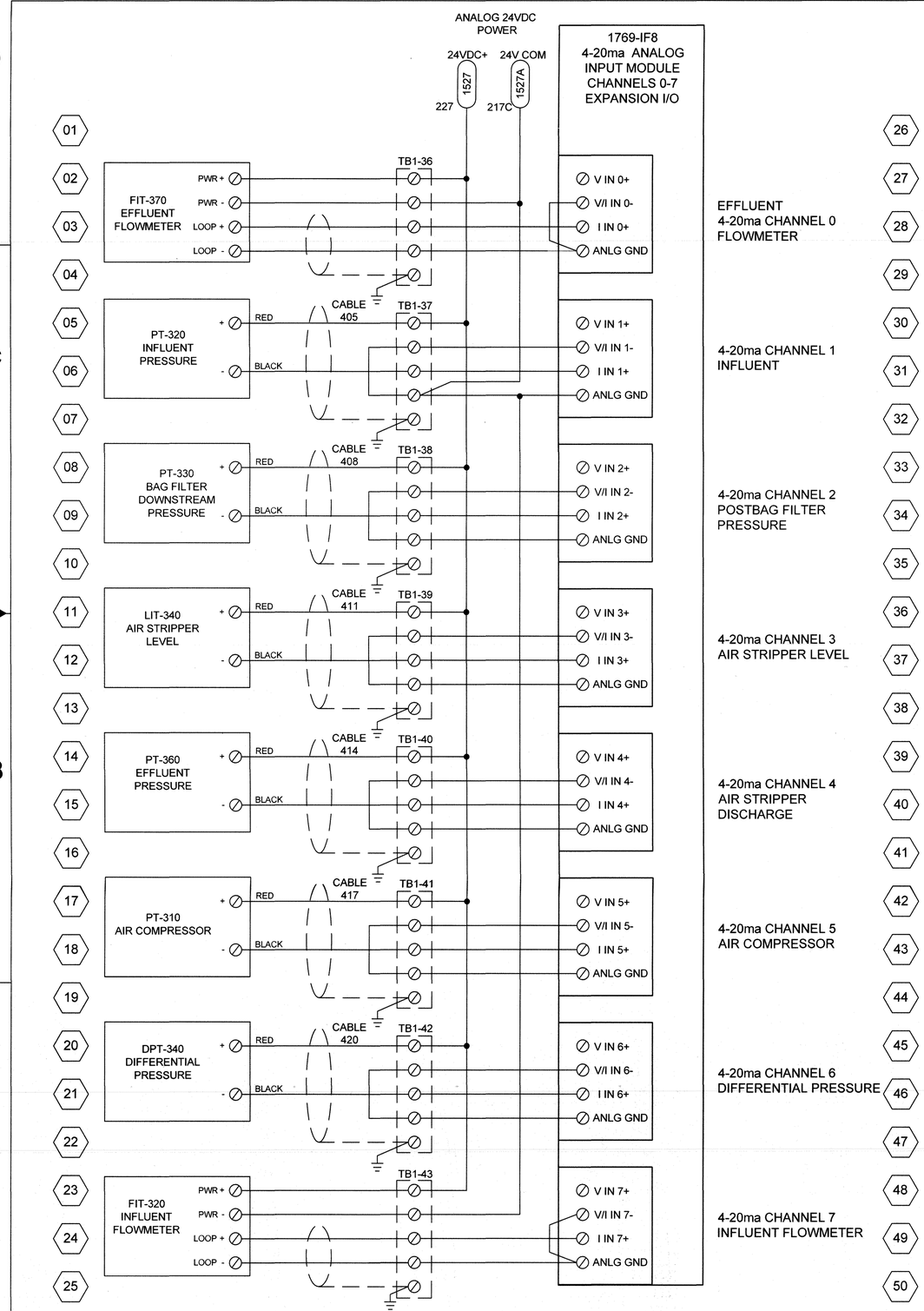

REV.	FA1		
DRW.	ROBIN FLOWERS	12/8/16	
CHKR.	JOE BLAGG	12/8/16	
R.E.	JOE BLAGG	12/8/16	
T. R.	P.L.SPEES	12/9/16	
APPD.	KAREN SIZEMORE	12/12/16	
DRAWING APPROVALS		DATE	

PRIORITY 3

REV	DRW	CHKR	RE	TR	APPD	DATE
1	KTW	JWB	JWB	—	KAS	10/3/17

FLUOR. PADUCAH DEACTIVATION PROJECT
DOE Prime Contract #DE-DT0007774

U.S. DEPARTMENT OF ENERGY
PADUCAH, PORTSMOUTH PROJECT OPERATIONS,
PADUCAH GASEOUS DIFFUSION PLANT

LATA Environmental Services of Kentucky, LLC managed for the DEPARTMENT OF ENERGY under U.S. GOVERNMENT contact DE-AC30-10CC40020 Paducah, Kentucky

DOE CONTRACT NO. DE-AC30-10CC40020

PROJECT NAME:
NE PLUME OPTIMIZATION

TITLE:
C-765-A
ANALOG SCHEMATICS

EDCS CAD FILENAME	BUILDING	PLANT	CLASS
E7DC7650AA017 rev1.dwg	C-765	PDGP	U

SCALE:	DRAWING NUMBER	REV
N/A	E7DC7650AA017	1

LPE

STATE OF KENTUCKY — PHILIP LYNN SPEES 13543 — LICENSED PROFESSIONAL ENGINEER

P. L. Spees 10-2-17
DATE:
PROFESSIONAL SEAL

REV.	DATE	DESCRIPTION	DRAWN BY	DRAFT CHK	PROJ ENGR	LEAD ENGR	CONF CTRL/ NUCL SFTY	FAC MGR	E&TS MGR
1	X	AS-BUILT ENTIRE DRAWING FOR ESO FA1951	X	X	X	X	X	X	X
FA1	X	CERTIFIED FOR CONSTRUCTION FOR ESO FA1951	X	X	X	X	X	X	X
0	11/26/13	ISSUED FOR CONSTRUCTION	TL	TD	BK	TS	—	DLC	KAF

DRAWING REVISIONS

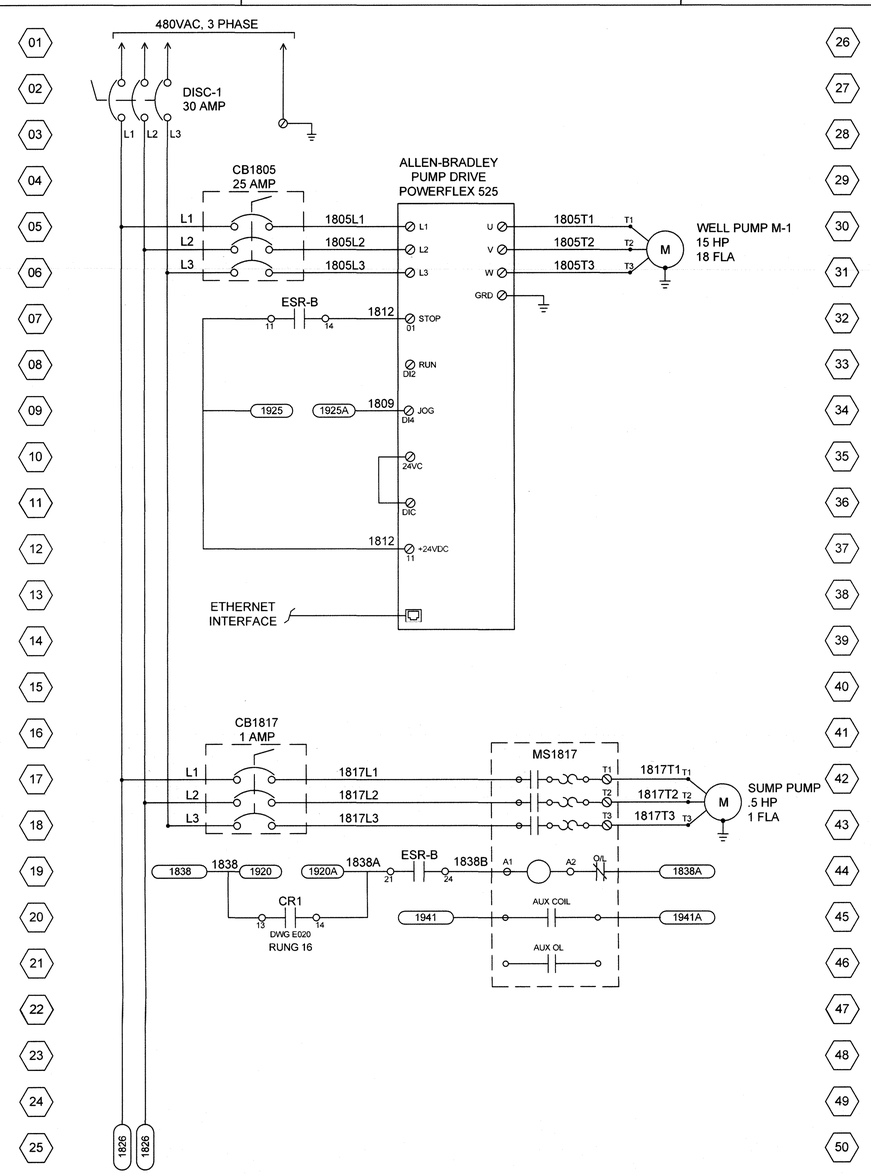

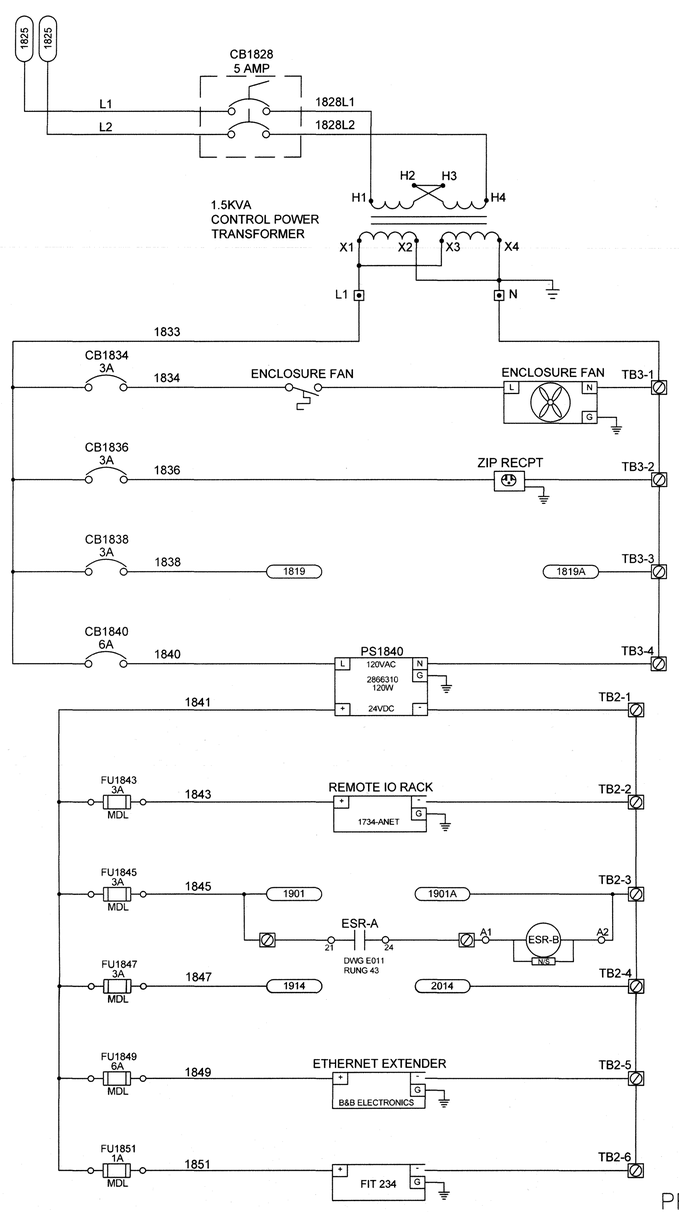

PRIORITY 3

REV.	FA2	
DRW.	B. RUSHING	5/3/17
CHKR.	JOE BLAGG	5/3/17
R.E.	JOE BLAGG	5/3/17
T. R.	N/A	
APPD.	KAREN SIZEMORE	5/3/17
DRAWING APPROVALS		DATE

REV	DRW	CHKR	RE	TR	APPD	DATE
1	KTW	JB	JB	—	KAS	10/2/17

FLUOR. PADUCAH DEACTIVATION PROJECT
DOE Prime Contract #DE-DT0007774

U.S. DEPARTMENT OF ENERGY
PADUCAH, PORTSMOUTH PROJECT OPERATIONS,
PADUCAH GASEOUS DIFFUSION PLANT

LATA Environmental Services of Kentucky, LLC managed for the DEPARTMENT OF ENERGY under U.S. GOVERNMENT contact DE-AC30-10CC40020 Paducah, Kentucky

DOE CONTRACT NO. DE-AC30-10CC40020

PROJECT NAME:
NE PLUME OPTIMIZATION

TITLE:
EXTRACTION WELL 234
PANEL 480 V SCHEMATICS

EDCS CAD FILENAME	BUILDING	PLANT	CLASS
E7DC7650AA018 REV1.DWG	C-765	PDGP	U

SCALE:	DRAWING NUMBER	REV
N/A	E7DC7650AA018	1

LPE

STATE OF KENTUCKY
PHILIP LYNN SPEES
13543
LICENSED PROFESSIONAL ENGINEER

P.L. Spees 10-2-17

DATE:

PROFESSIONAL SEAL

REV.	DATE	DESCRIPTION	DRAWN BY	DRAFT CHK	PROJ ENGR	LEAD ENGR	CONF CTRL/ NUCL SFTY	FAC MGR	E&TS MGR
1	X	AS-BUILT ENTIRE DRAWING FOR ESO FA1951, INC. ECR-2017-0003	X	X	X	X	X	X	X
FA2	X	CERTIFIED FOR CONSTRUCTION FOR ESO FA1951/ ECR-2017-0003	X	X	X	X	X	X	X
FA1	12/12/16	CERTIFIED FOR CONSTRUCTION FOR ESO FA1951	RF	JB	PS	KAS	—	X	X
0	11/26/13	ISSUED FOR CONSTRUCTION	TC	TH	BK	TS	—	DLC	KAF

DRAWING REVISIONS

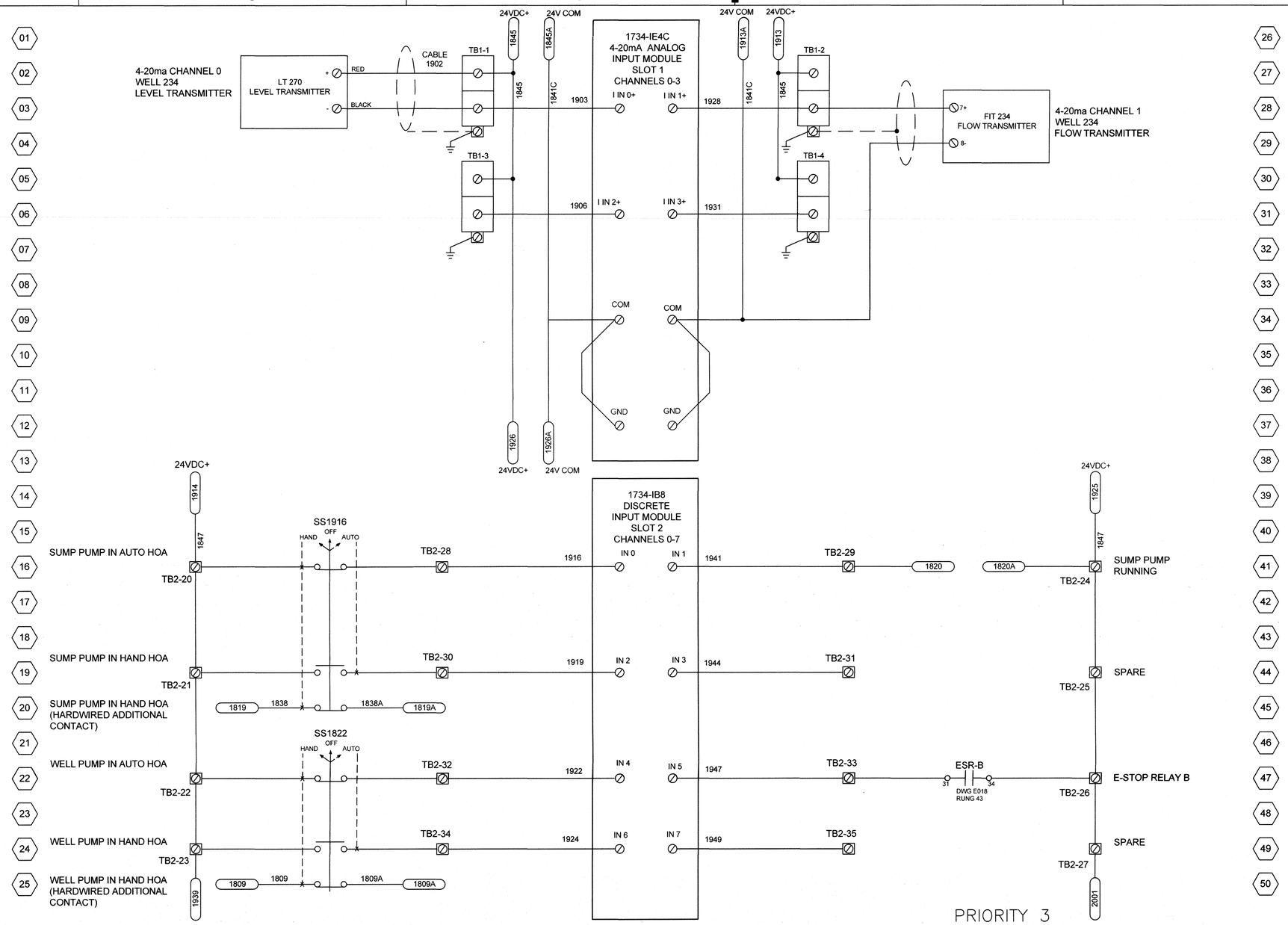

PRIORITY 3

REV	DRW	CHKR	RE	TR	APPD	DATE
1	KTW	JGB	JGB	—	KAS	10/2/17

REV.	FA2	
DRW.	B. RUSHING	5/3/17
CHKR.	JOE BLAGG	5/3/17
R.E.	JOE BLAGG	5/3/17
T. R.	N/A	
APPD.	KAREN SIZEMORE	5/3/17
DRAWING APPROVALS		DATE

FLUOR.

PADUCAH DEACTIVATION PROJECT
DOE Prime Contract #DE-DT0007774

U.S. DEPARTMENT OF ENERGY
PADUCAH, PORTSMOUTH PROJECT OPERATIONS,
PADUCAH GASEOUS DIFFUSION PLANT

LATA Environmental Services of Kentucky, LLC managed for the DEPARTMENT OF ENERGY under U.S. GOVERNMENT contact DE-AC30-10CC40020 Paducah, Kentucky

DOE CONTRACT NO. DE-AC30-10CC40020

PROJECT NAME:
NE PLUME OPTIMIZATION

TITLE:
EXTRACTION WELL 234
PANEL 480 V SCHEMATICS

EDCS CAD FILENAME	BUILDING	PLANT	CLASS
E7DC7650AA019 REV1.DWG	C-765	PDGP	U

SCALE:	DRAWING NUMBER	REV
N/A	E7DC7650AA019	1

LPE

STATE OF KENTUCKY
PHILIP LYNN SPEES
13543
LICENSED
PROFESSIONAL ENGINEER

P. L. Spees 10-2-17

DATE:
PROFESSIONAL SEAL

REV.	DATE	DESCRIPTION	DRAWN BY	DRAFT CHK	PROJ ENGR	LEAD ENGR	CONF CTRL/ NUCL SFTY	FAC MGR	E&TS MGR
1	X	AS-BUILT ENTIRE DRAWING FOR ESO FA1951, INC. ECR-2017-0003	X	X	X	X	X	X	X
FA2	X	CERTIFIED FOR CONSTRUCTION FOR ESO FA1951/ ECR-2017-0003	X	X	X	X	X	X	X
FA1	12/12/16	CERTIFIED FOR CONSTRUCTION FOR ESO FA1951	RF	JB	PS	KAS	—	X	X
0	11/25/13	ISSUED FOR CONSTRUCTION	TK	TH	GK	TS	—	DLC	KAF

DRAWING REVISIONS

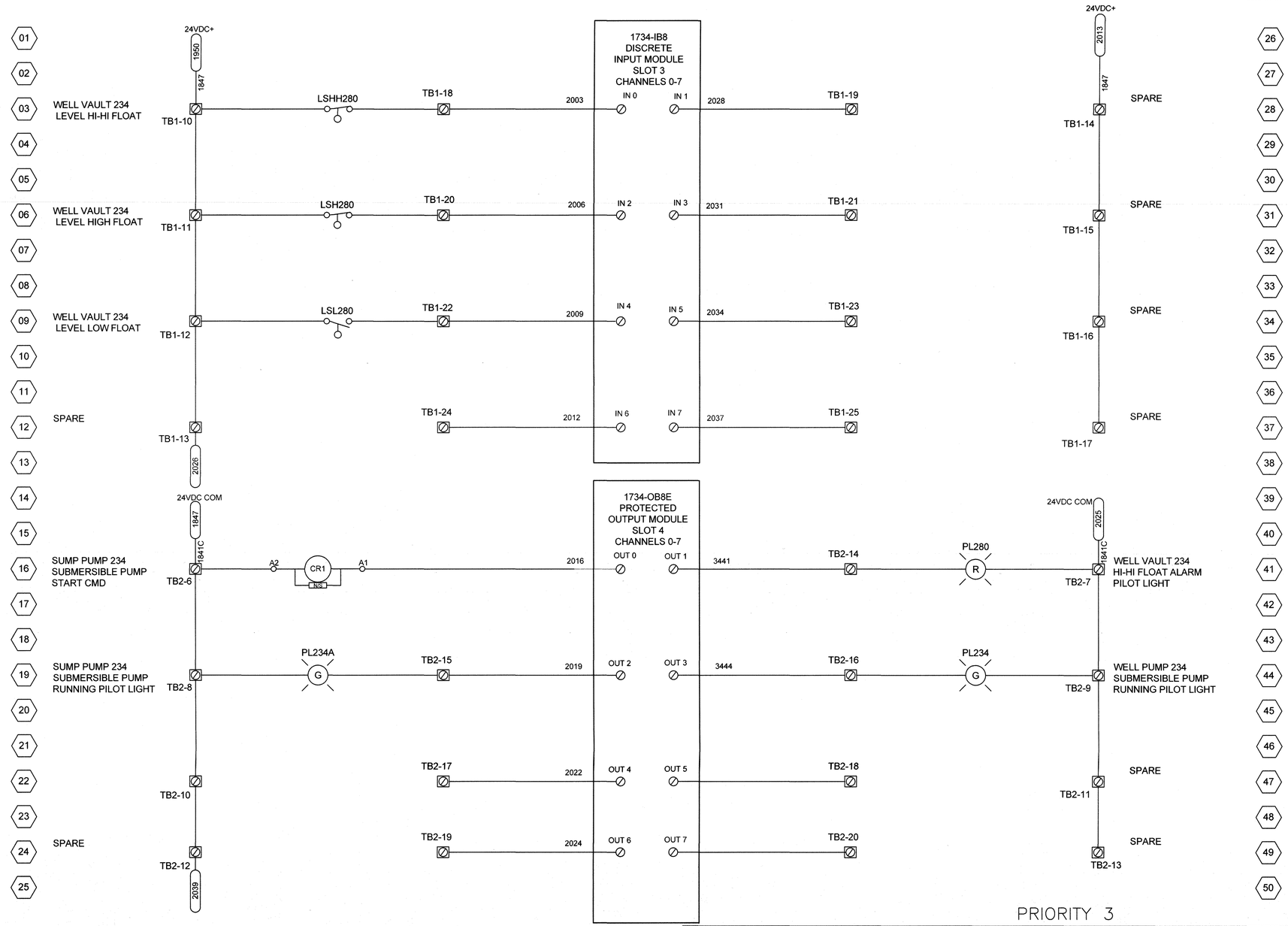

PRIORITY 3

REV	DRW	CHKR	RE	TR	APPD	DATE
1	KTW			—	KTS	10/2/17

REV.	FA1	
DRW.	ROBIN FLOWERS	12/8/16
CHKR.	JOE BLAGG	12/8/16
R.E.	JOE BLAGG	12/8/16
T. R.	P.L.SPEES	12/9/16
APPD.	KAREN SIZEMORE	12/12/16
DRAWING APPROVALS		DATE

FLUOR. PADUCAH DEACTIVATION PROJECT
DOE Prime Contract #DE-DT0007774

U.S. DEPARTMENT OF ENERGY
PADUCAH, PORTSMOUTH PROJECT OPERATIONS,
PADUCAH GASEOUS DIFFUSION PLANT

LATA Environmental Services of Kentucky, LLC managed for the DEPARTMENT OF ENERGY under U.S. GOVERNMENT contact DE-AC30-10CC40020 Paducah, Kentucky

DOE CONTRACT NO. DE-AC30-10CC40020

PROJECT NAME:
NE PLUME OPTIMIZATION

TITLE:
EXTRACTION WELL 234
PANEL 480 V SCHEMATICS

EDCS CAD FILENAME	BUILDING	PLANT	CLASS
E7DC7650AA020 REV1.DWG	C-765	PDGP	U

SCALE:	DRAWING NUMBER	REV
N/A	E7DC7650AA020	1

LPE

STATE OF KENTUCKY
PHILIP LYNN SPEES
13543
LICENSED PROFESSIONAL ENGINEER

P. L. Spees 10-2-17
DATE:
PROFESSIONAL SEAL

REV.	DATE	DESCRIPTION	DRAWN BY	DRAFT CHK	PROJ ENGR	LEAD ENGR	CONF CTRL/ NUCL SFTY	FAC MGR	E&TS MGR
1	X	AS-BUILT ENTIRE DRAWING FOR ESO FA1951	X	X	X	X	X	X	X
FA1	X	CERTIFIED FOR CONSTRUCTION FOR ESO FA1951	X	X	X	X	X	X	X
0	11/26/13	ISSUED FOR CONSTRUCTION	KL	TH	BK	TS	—	DLC	KAF

DRAWING REVISIONS

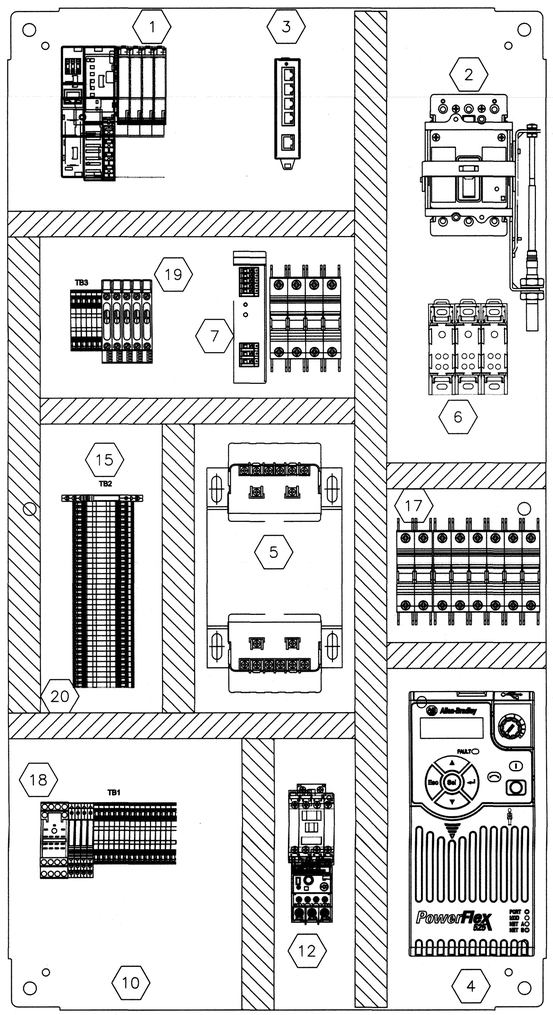

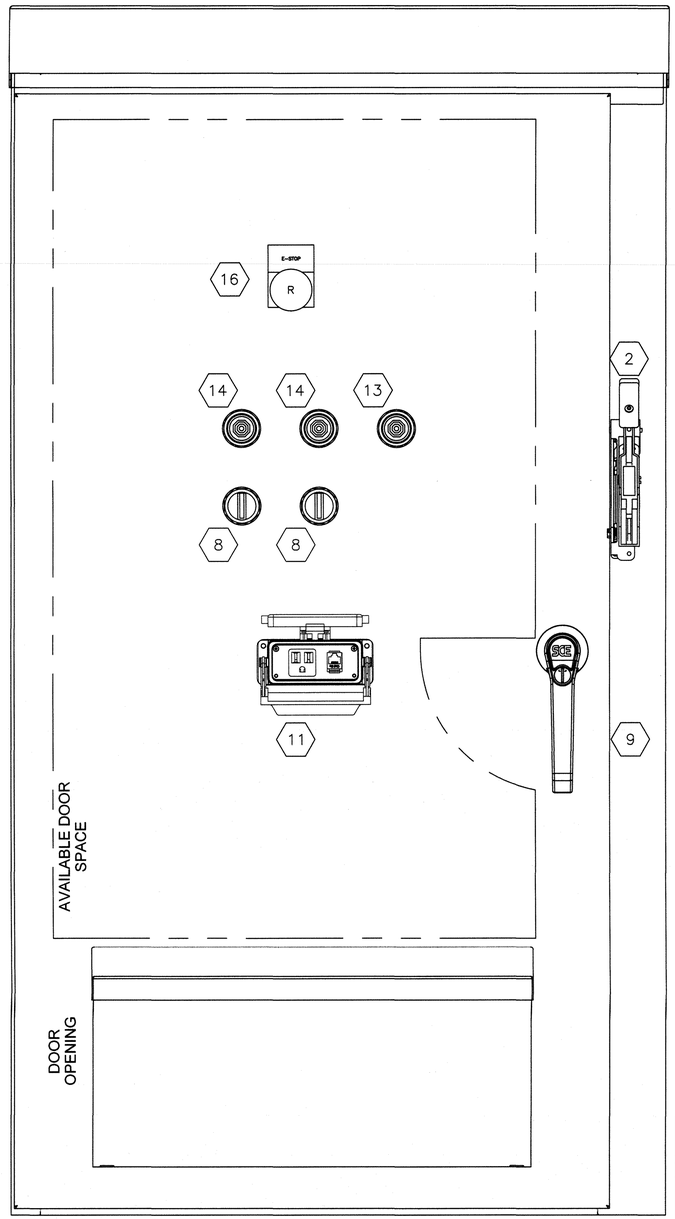

Bill of Material

Item #	Qty	Description	Part Number	Manufacturer
1	1	AB Point IO Comms Ethernet	1734-ANET	Allen Bradley
	1	A/I Current Input 4CH	1734-IE4C	Allen Bradley
	2	D/I 24VDC SINK/SOURCE 8CH	1734-IB8	Allen Bradley
	4	Mounting Base 8 Term Cage	1734-TB	Allen Bradley
	1	D/O 24VDC SOURCE 8CH	1734-OB8E	Allen Bradley
2	1	30 A molded case circuit breaker	EGH3030FFG	Eaton
	1	NEMA 4, disconnect handle with 3' flex shaft	EHMFS03X	Eaton
3	1	Ethernet extender	EIR-EXTEND	B&B Electronics
4	1	PowerFlex 525 AC Drive	25B-D030N114	Allen-Bradley
5	1	Transformer Control 1500VA 480x240VAC to 240x120VAC	PH1500MQMJ	Hammond Power Solutions
6	3	Din-Rail mounted, finger-safe power distribution block	EPDB104	Edison
7	1	PS 120 VAC 24 VDC 5 A	2866310	Phoenix Contact
8	2	NEMA 4, 30.5mm, 3 pos. switch	800T-J4B	Allen Bradley
9	1	Diconnect Enclosure, NEMA 3R	SCE-47XVR2514	Saginaw
10	1	Sub Panel	SCE-42p24	Saginaw
11	1	(1) RJ45 panel interface connector; female exterior, male interior, (1) 120VAC recpt.	ZP-PSA-16-101	Zip Port
12	1	IEC Motor Contactor w/ Overload	XTCE007B10A1P6	Eaton
13	1	NEMA 4, 30.5mm, Red, LED	800T-QTH2R	Allen Bradley
14	1	NEMA 4, 30.5mm, Green, LED	800T-QTH2G	Allen Bradley
15	1	SPST Relay, 24VDC Coil	2966210	Phoenix Contact
16	1	E-STOP PUSHBUTTON	800T-FX6A5	Allen Bradley
17	1	Circuit Breaker 3 pole 25A	FAZ-D25/3NA	Eaton
	1	Circuit Breaker 3 pole 2A	FAZ-D2/3NA	Eaton
	1	Circuit Breaker 2 pole 5A	FAZ-D5/2NA	Eaton
18	1	E-STOP RELAY	700-HC14Z24	Allen Bradley
	1	E-STOP RELAY BASE	700-HN103	Allen Bradley
19	5	Fuse Holder	XBUT6FBN	Eaton
20		Terminal Blocks	XBUT25	Eaton

REV.	FA2	
DRW.	ROBIN FLOWERS	5/3/17
CHKR.	JOE BLAGG	5/3/17
R.E.	JOE BLAGG	5/3/17
T. R.	N/A	
APPD.	KAREN SIZEMORE	5/3/17
DRAWING APPROVALS		DATE

REV	DRW	CHKR	RE	TR	APPD	DATE
1	KTW	JWB	JWB	—	KAS	10/2/17

PRIORITY 3

LPE

STATE OF KENTUCKY
PHILIP LYNN SPEES
13543
LICENSED PROFESSIONAL ENGINEER

P.L. Spees 10-2-17

DATE:

PROFESSIONAL SEAL

REV.	DATE	DESCRIPTION	DRAWN BY	DRAFT CHK	PROJ ENGR	LEAD ENGR	CONF CTRL/ NUCL SFTY	FAC MGR	E&TS MGR
1	X	AS-BUILT ENTIRE DRAWING FOR ESO FA1951, INC. ECR-2017-0003	X	X	X	X	X	X	X
FA2	X	CERTIFIED FOR CONSTRUCTION FOR ESO FA1951/ ECR-2017-0003	X	X	X	X	X	X	X
FA1	12/12/16	CERTIFIED FOR CONSTRUCTION FOR ESO FA1951	RF	JB	PS	KAS		X	X
0	11/28/13	ISSUED FOR CONSTRUCTION	TL	TH	BK	TS	—	DLC	KAF

DRAWING REVISIONS

FLUOR.

PADUCAH DEACTIVATION PROJECT
DOE Prime Contract #DE-DT0007774

U.S. DEPARTMENT OF ENERGY
PADUCAH, PORTSMOUTH PROJECT OPERATIONS,
PADUCAH GASEOUS DIFFUSION PLANT

LATA Environmental Services of Kentucky, LLC managed for the DEPARTMENT OF ENERGY under U.S. GOVERNMENT contact DE-AC30-10CC40020 Paducah, Kentucky

DOE CONTRACT NO. DE-AC30-10CC40020

PROJECT NAME:
NE PLUME OPTIMIZATION

TITLE:
EXTRACTION WELL 234
VFD ENCLOSURE LAYOUT

EDCS CAD FILENAME	BUILDING	PLANT	CLASS
E7DC7650AA021 REV1.DWG	C-765	PDGP	U

SCALE:	DRAWING NUMBER	REV
N/A	E7DC7650AA021	1

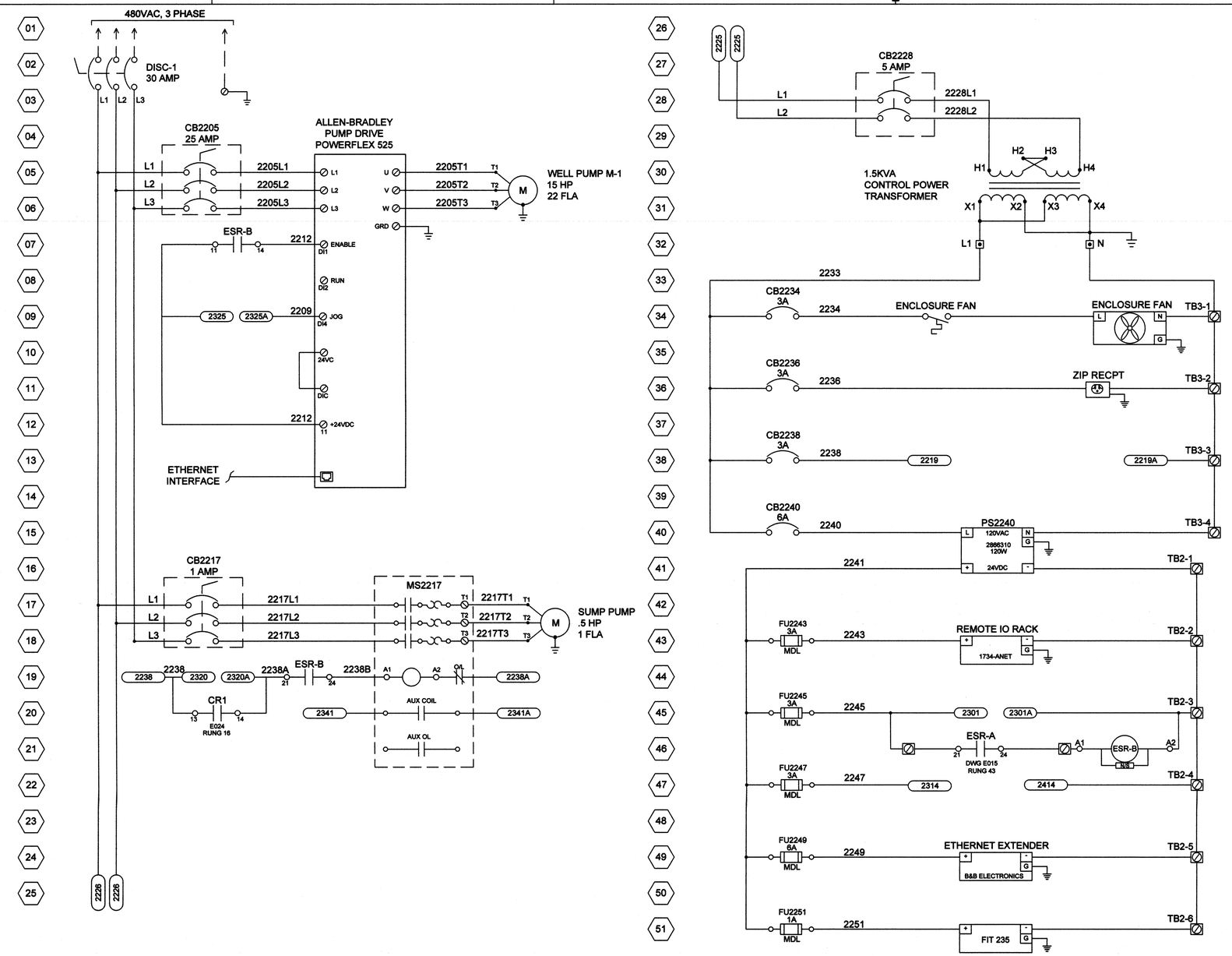

REV	DRW	CHKR	RE	TR	APPD	DATE
1	BR	JB	JB	—	KAS	10/2/17

PRIORITY 3

REV. FA2		
DRW.	B. RUSHING	5/3/17
CHKR.	JOE BLAGG	5/3/17
R.E.	JOE BLAGG	5/3/17
T. R.	N/A	
APPD.	KAREN SIZEMORE	5/3/17
DRAWING APPROVALS		DATE

FLUOR. PADUCAH DEACTIVATION PROJECT
DOE Prime Contract #DE-DT0007774

U.S. DEPARTMENT OF ENERGY
PADUCAH, PORTSMOUTH PROJECT OPERATIONS,
PADUCAH GASEOUS DIFFUSION PLANT

LATA Environmental Services of Kentucky, LLC managed for the DEPARTMENT OF ENERGY under U.S. GOVERNMENT contact DE-AC30-10CC40020 Paducah, Kentucky

DOE CONTRACT NO. DE-AC30-10CC40020

PROJECT NAME:
NE PLUME OPTIMIZATION

TITLE:
EXTRACTION WELL 235
PANEL 480 V SCHEMATICS

EDCS CAD FILENAME	BUILDING	PLANT	CLASS
E7DC7650AA022 REV1.DWG	C-765-A	PDGP	U

SCALE:	DRAWING NUMBER	REV
N/A	E7DC7650AA022	1

LPE

STATE OF KENTUCKY
PHILIP LYNN SPEES
13543
LICENSED PROFESSIONAL ENGINEER

P. L. Spees 10-2-17

DATE:

PROFESSIONAL SEAL

REV.	DATE	DESCRIPTION	DRAWN BY	DRAFT CHK	PROJ ENGR	LEAD ENGR	CONF CTRL/ NUCL SFTY	FAC MGR	EA/TS MGR
1	X	AS-BUILT ENTIRE DRAWING FOR ESO FA1951, INC. ECR-2017-0003	X	X	X	X	X	X	X
FA2	X	CERTIFIED FOR CONSTRUCTION FOR ESO FA1951/ ECR-2017-0003	X	X	X	X	X	X	X
FA1	12/12/16	CERTIFIED FOR CONSTRUCTION FOR ESO FA1951	RF	JB	PS	KAS	—	X	X
0	11/26/13	ISSUED FOR CONSTRUCTION	TL	HI	BH	TS	—	DLC	KAF

DRAWING REVISIONS

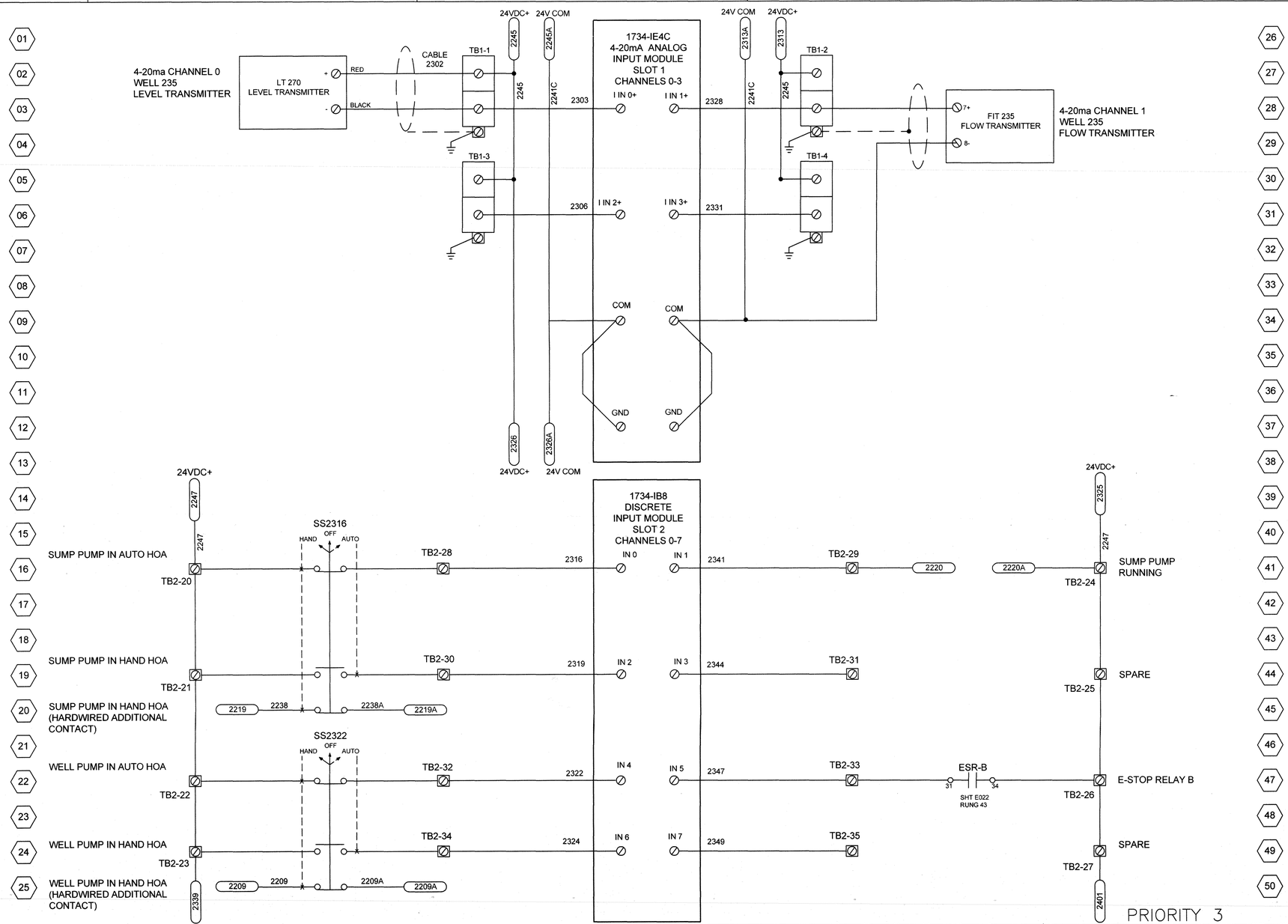

PRIORITY 3

REV.	FA2	
DRW.	ROBIN FLOWERS	5/3/17
CHKR.	JOE BLAGG	5/3/17
R.E.	JOE BLAGG	5/3/17
T. R.	N/A	
APPD.	KAREN SIZEMORE	5/3/17
DRAWING APPROVALS		DATE

REV	DRW	CHKR	RE	TR	APPD	DATE
1	KTW	JBB	JBB	—	KAS	10/2/17

FLUOR.

PADUCAH DEACTIVATION PROJECT
DOE Prime Contract #DE-DT0007774

U.S. DEPARTMENT OF ENERGY
PADUCAH, PORTSMOUTH PROJECT OPERATIONS,
PADUCAH GASEOUS DIFFUSION PLANT

LATA Environmental Services of Kentucky, LLC managed for the DEPARTMENT OF ENERGY under U.S. GOVERNMENT contact DE-AC30-10CC40020 Paducah, Kentucky

DOE CONTRACT NO. DE-AC30-10CC40020

PROJECT NAME:
NE PLUME OPTIMIZATION

TITLE:
EXTRACTION WELL 235
PANEL 480 V SCHEMATICS

EDCS CAD FILENAME	BUILDING	PLANT	CLASS
E7DC7650AA023 REV1.DWG	C-765-A	PDGP	U

SCALE:	DRAWING NUMBER	REV
N/A	E7DC7650AA023	1

LPE

STATE OF KENTUCKY
PHILIP LYNN SPEES
13543
LICENSED
PROFESSIONAL ENGINEER

P. L. Spees 10-2-17

DATE:

PROFESSIONAL SEAL

REV.	DATE	DESCRIPTION	DRAWN BY	DRAFT CHK	PROJ ENGR	LEAD ENGR	CONF CTRL/ NUCL SFTY	FAC MGR	E&TS MGR
1	X	AS-BUILT ENTIRE DRAWING FOR ESO FA1951, INC. ECR-2017-0003	X	X	X	X	X	X	X
FA2	X	CERTIFIED FOR CONSTRUCTION FOR ESO FA1951/ ECR-2017-0003	X	X	X	X	X	X	X
FA1	12/12/16	CERTIFIED FOR CONSTRUCTION FOR ESO FA1951	RF	JB	PS	KAS	—	X	X
0	11/28/13	ISSUED FOR CONSTRUCTION	XL	TH	BK	TS	—	DLC	KAF

DRAWING REVISIONS

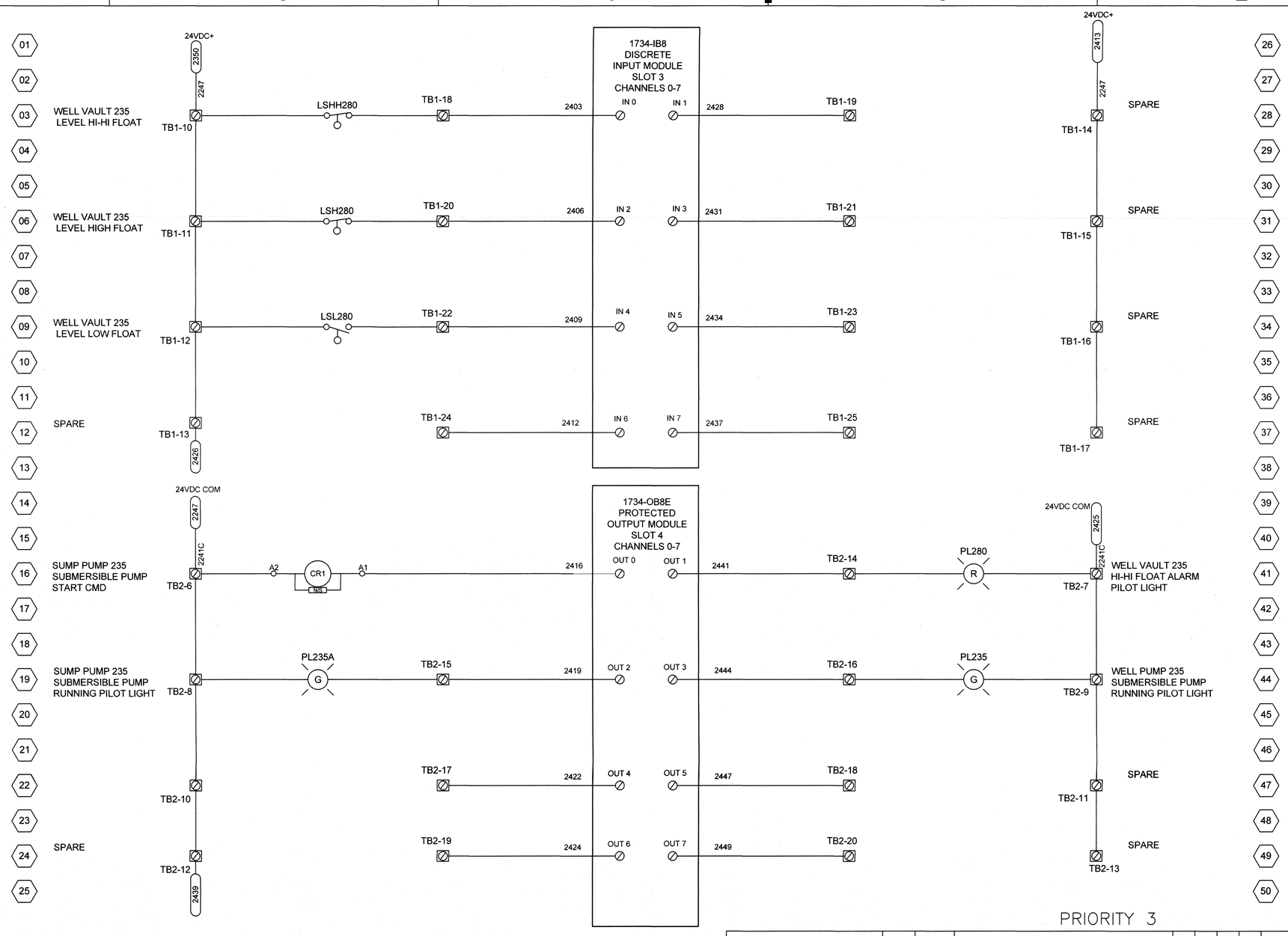

PRIORITY 3

REV.	FA1	
DRW.	ROBIN FLOWERS	12/8/16
CHKR.	JOE BLAGG	12/8/16
R.E.	JOE BLAGG	12/8/16
T.R.	P.L.SPEES	12/9/16
APPD.	KAREN SIZEMORE	12/12/16
DRAWING APPROVALS		DATE

REV	DRW	CHKR	RE	TR	APPD	DATE
1	KEW	JWB	JWB	—	KAS	10/2/17

FLUOR. PADUCAH DEACTIVATION PROJECT
DOE Prime Contract #DE-DT0007774

U.S. DEPARTMENT OF ENERGY
PADUCAH, PORTSMOUTH PROJECT OPERATIONS,
PADUCAH GASEOUS DIFFUSION PLANT

LATA Environmental Services of Kentucky, LLC managed for the DEPARTMENT OF ENERGY under U.S. GOVERNMENT contact DE-AC30-10CC40020 Paducah, Kentucky

DOE CONTRACT NO. DE-AC30-10CC40020

PROJECT NAME:
NE PLUME OPTIMIZATION

TITLE:
EXTRACTION WELL 235
PANEL 480 V SCHEMATICS

EDCS CAD FILENAME	BUILDING	PLANT	CLASS
E7DC7650AA024 REV1.DWG	C-765	PDGP	U

SCALE:	DRAWING NUMBER	REV
N/A	E7DC7650AA024	1

LPE

STATE OF KENTUCKY
PHILIP LYNN SPEES
13543
LICENSED
PROFESSIONAL ENGINEER

P. L. Spees 10-2-17

DATE:

PROFESSIONAL SEAL

REV.	DATE	DESCRIPTION	DRAWN BY	DRAFT CHK	PROJ ENGR	LEAD ENGR	CONF CTRL/ NUCL SFTY	FAC MGR	E&TS MGR
1	X	AS-BUILT ENTIRE DRAWING FOR ESO FA1951	X	X	X	X	X	X	X
FA1	X	CERTIFIED FOR CONSTRUCTION FOR ESO FA1951	X	X	X	X	X	X	X
0	11/25/13	ISSUED FOR CONSTRUCTION	JL	TH	BK	TS	—	DLC	KAF

DRAWING REVISIONS

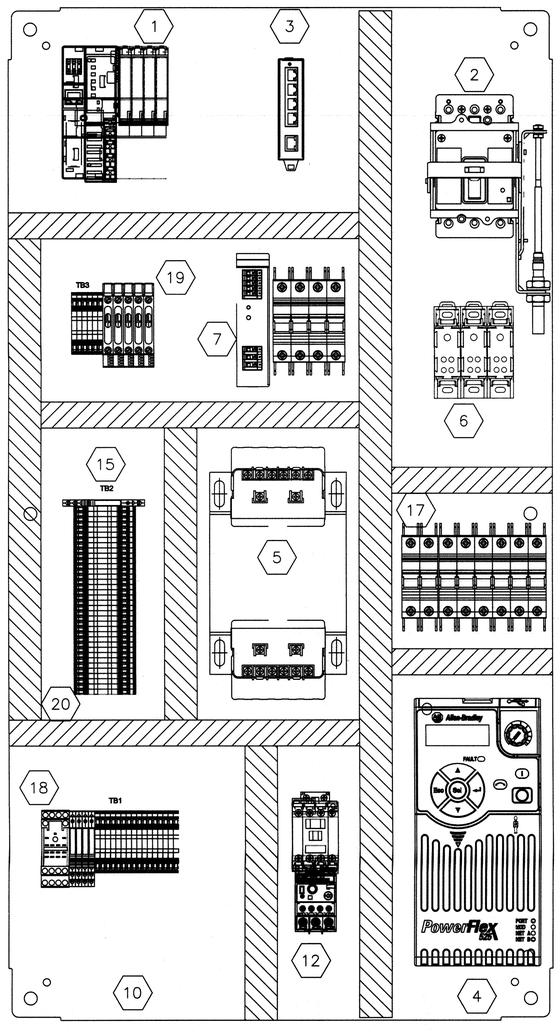

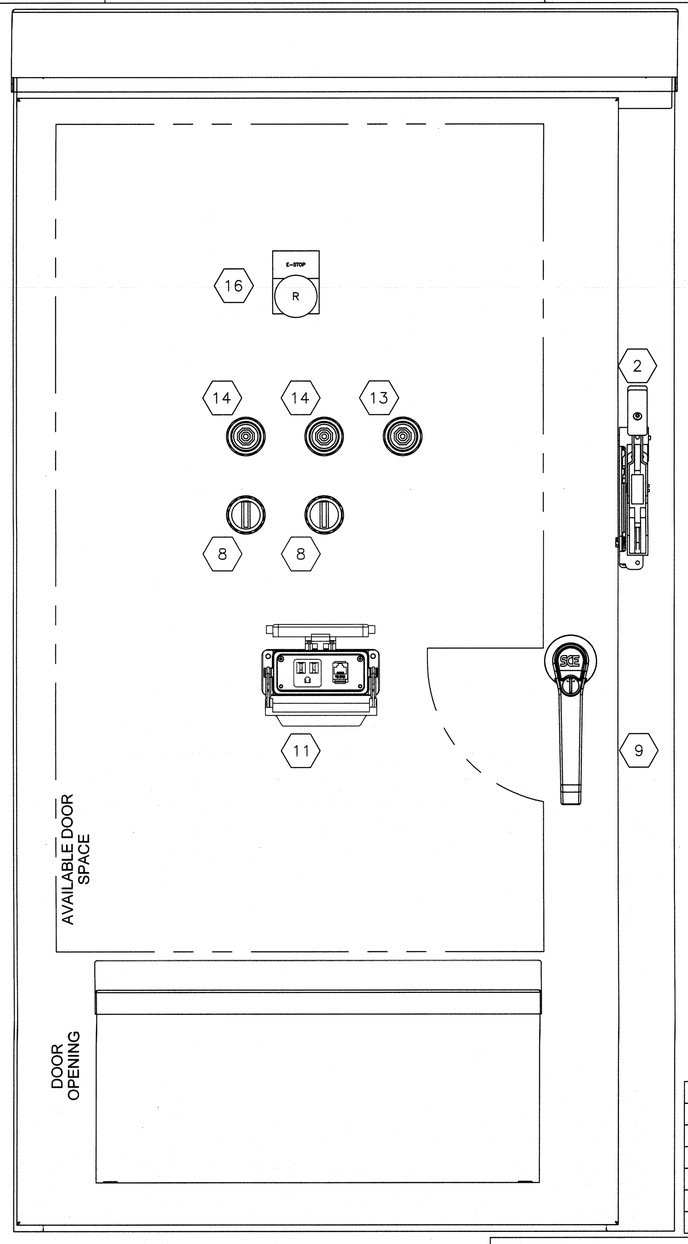

Bill of Material				
Item #	Qty	Description	Part Number	Manufacturer
1	1	AB Point IO Comms Ethernet	1734-ANET	Allen Bradley
	1	A/I Current Input 4CH	1734-IE4C	Allen Bradley
	2	D/I 24VDC SINK/SOURCE 8CH	1734-IB8	Allen Bradley
	4	Mounting Base 8 Term Cage	1734-TB	Allen Bradley
	1	D/O 24VDC SOURCE 8CH	1734-OB8E	Allen Bradley
2	1	30 A molded case circuit breaker	EGH3030FFG	Eaton
	1	NEMA 4, disconnect handle with 3' flex shaft	EHMFS03X	Eaton
3	1	Ethernet extender	EIR-EXTEND	B&B Electronics
4	1	PowerFlex 525 AC Drive	25B-D030N114	Allen-Bradley
5	1	Transformer Control 1500VA 480x240VAC to 240x120VAC	PH1500MQMJ	Hammond Power Solutions
6	3	Din-Rail mounted, finger-safe power distribution block	EPDB104	Edison
7	1	PS 120 VAC 24 VDC 5 A	2866310	Phoenix Contact
8	2	NEMA 4, 30.5mm, 3 pos. switch	800T-J4B	Allen Bradley
9	1	Diconnect Enclosure, NEMA 3R	SCE-47XVR2514	Saginaw
10	1	Sub Panel	SCE-42p24	Saginaw
11	1	(1) RJ45 panel interface connector; female exterior, male interior, (1) 120VAC recpt.	ZP-PSA-16-101	Zip Port
12	1	IEC Motor Contactor w/ Overload	XTCE007B10A1P6	Eaton
13	1	NEMA 4, 30.5mm, Red, LED	800T-QTH2R	Allen Bradley
14	1	NEMA 4, 30.5mm, Green, LED	800T-QTH2G	Allen Bradley
15	1	SPST Relay, 24VDC Coil	2966210	Phoenix Contact
16	1	E-STOP PUSHBUTTON	800T-FX6A5	Allen Bradley
17	1	Circuit Breaker 3 pole 25A	FAZ-D25/3NA	Eaton
	1	Circuit Breaker 3 pole 2A	FAZ-D2/3NA	Eaton
	1	Circuit Breaker 2 pole 5A	FAZ-D5/2NA	Eaton
18	1	E-STOP RELAY	700-HC14Z24	Allen Bradley
	1	E-STOP RELAY BASE	700-HN103	Allen Bradley
19	5	Fuse Holder	XBUT6FBN	Eaton
20		Terminal Blocks	XBUT25	Eaton

1	KTW	JHB	JHB	—	KAS	10/2/17	
REV	DRW	CHKR	RE	TR	APPD	DATE	

REV.	FA2	
DRW.	B. RUSHING	5/3/17
CHKR.	JOE BLAGG	5/3/17
R.E.	JOE BLAGG	5/3/17
T. R.	N/A	
APPD.	KAREN SIZEMORE	5/3/17
DRAWING APPROVALS		DATE

PRIORITY 3

LPE

STATE OF KENTUCKY
PHILIP LYNN SPEES
13543
LICENSED PROFESSIONAL ENGINEER

P. L. Spees 10-2-17

DATE:

PROFESSIONAL SEAL

REV.	DATE	DESCRIPTION	DRAWN BY	DRAFT CHK	PROJ ENGR	LEAD ENGR	CONF CTRL/ NUCL SFTY	FAC MGR	E&TS MGR
1	X	AS-BUILT ENTIRE DRAWING FOR ESO FA1951, INC. ECR-2017-0003	X	X	X	X	X	X	X
FA2	X	CERTIFIED FOR CONSTRUCTION FOR ESO FA1951/ ECR-2017-0003	X	X	X	X	X	X	X
FA1	12/12/16	CERTIFIED FOR CONSTRUCTION FOR ESO FA1951	RF	JB	PS	KAS		X	X
0	11/28/13	ISSUED FOR CONSTRUCTION	TL	TH	BN	TS		DLC	KAF

DRAWING REVISIONS

FLUOR.

PADUCAH DEACTIVATION PROJECT
DOE Prime Contract #DE-DT0007774

U.S. DEPARTMENT OF ENERGY
PADUCAH, PORTSMOUTH PROJECT OPERATIONS,
PADUCAH GASEOUS DIFFUSION PLANT

LATA Environmental Services of Kentucky, LLC managed for the DEPARTMENT OF ENERGY under U.S. GOVERNMENT contact DE-AC30-10CC40020 Paducah, Kentucky

DOE CONTRACT NO. DE-AC30-10CC40020

PROJECT NAME:
NE PLUME OPTIMIZATION

TITLE:
EXTRACTION WELL 235
VFD ENCLOSURE LAYOUT

EDCS CAD FILENAME	BUILDING	PLANT	CLASS
E7DC7650AA025 REV1.DWG	C-765-A	PDGP	U

SCALE:	DRAWING NUMBER	REV
N/A	E7DC7650AA025	1

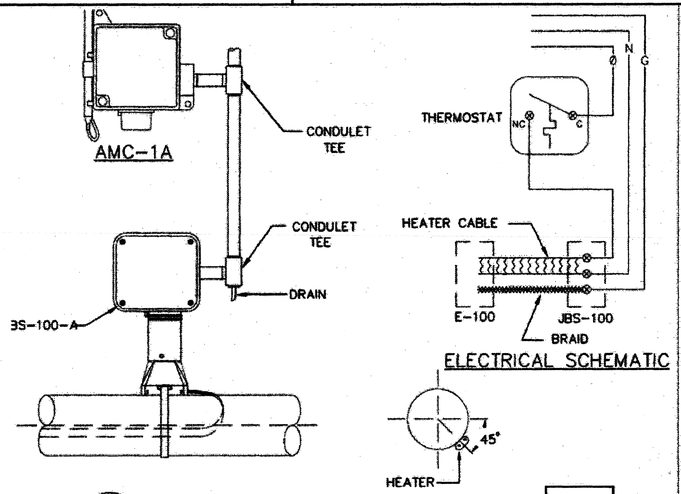

A026 — A026

AMBIENT-SENSING THERMOSTAT

SCALE: NTS.

T DRAWING SYMBOL

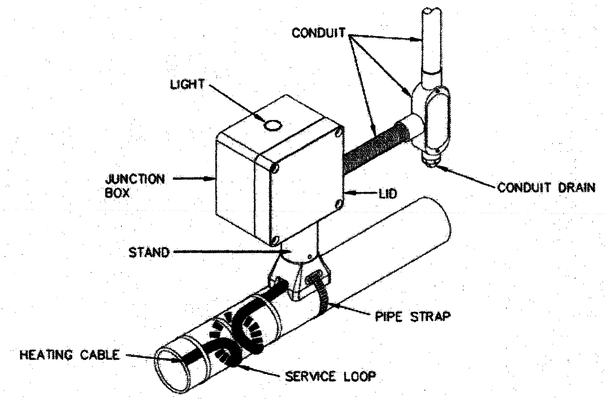

A026 — A026

LIGHTED POWER CONNECTION BOX

SCALE: NTS.

P DRAWING SYMBOL

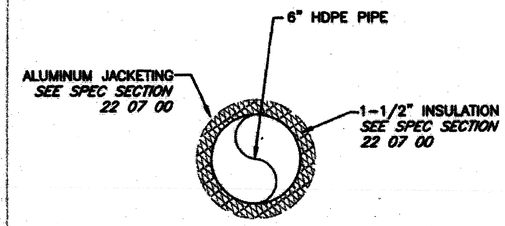

A026 — A026

TYP. PIPE INSULATION DETAIL

SCALE: NTS.

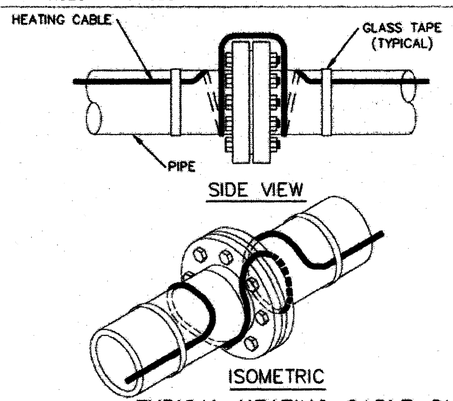

A026 — A026

TYPICAL HEATING CABLE ON FLANGE INSTALLATION

SCALE: NTS.

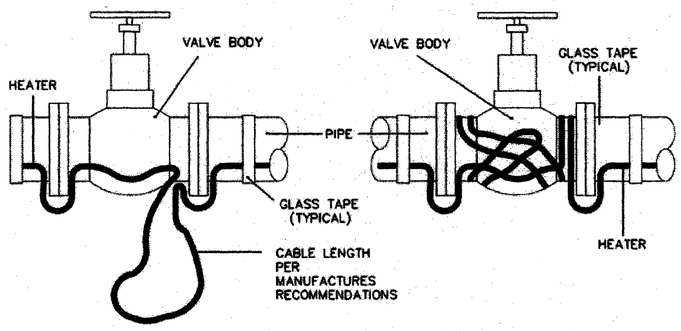

A026 — A026

TYPICAL VALVE INSTALLATION

SCALE: NTS.

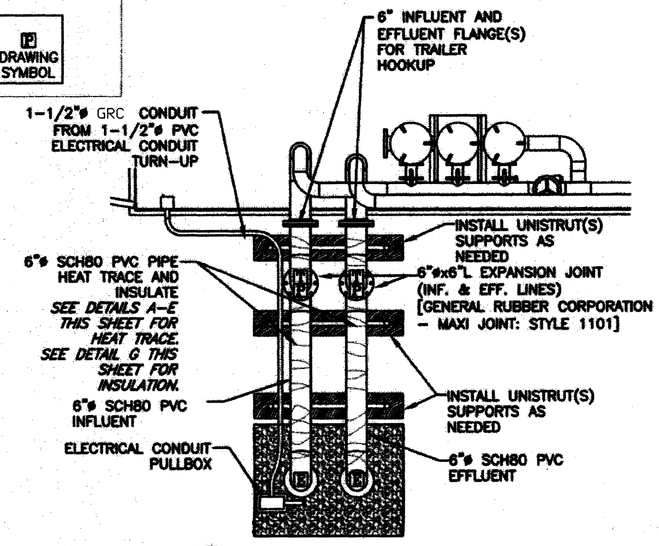

C7DC7650AA005 — A026

C-765-A HOOKUP (PLAN VIEW)

SCALE: NTS.

GENERAL HEAT TRACE NOTES

1. THE COMPLETE HEAT TRACE SYSTEM SHALL BE INSTALLED IN STRICT COMPLIANCE WITH THE NATIONAL ELECTRIC CODE, LOCAL CODES, DESIGN DRAWINGS, NOTES, DETAILS.
2. INSTALL RAYCHEM CHEMELEX CABLE 8 WATT PER FOOT HEAT TRACE FOR 6" PIPING, PART NO. 8BTV1-CR WITH 1-1/2" INSULATION OR CONTRACTOR APPROVED EQUAL PER MANUFACTURER'S INSTRUCTIONS.
3. USE FOIL TAPE FOR PVC PIPE AND GLASS TAPE FOR STEEL PIPE. INSTALL IN ACCORDANCE WITH MANUFACTURERS INSTRUCTIONS. ENSURE ALL HEAT TRACED PIPE IS INSULATED.
4. THESE DETAILS SHOW THE GENERAL INSTALLATION METHOD. DETAILED INSTALLATION INSTRUCTIONS ARE SUPPLIED WITH THE CONNECTION KITS.
5. BUS WIRES WILL SHORT IF THEY CONTACT EACH OTHER. KEEP BUS WIRES SEPARATED.
6. COMPONENTS AND CABLE ENDS MUST BE KEPT DRY BEFORE AND DURING INSTALLATION.
7. THE BLACK HEATING CABLE CORE AND FIBERS ARE CONDUCTIVE AND CAN SHORT. THEY MUST BE PROPERLY INSULATED AND KEPT DRY.
8. DAMAGED BUS WIRES CAN OVERHEAT OR SHORT. DO NOT BREAK BUS WIRE STRANDS WHEN SCORING THE JACKET OR CORE.
9. DAMAGED HEATING CABLE CAN CAUSE ELECTRICAL ARCING OR FIRE. DO NOT USE METAL ATTACHMENTS SUCH AS PIPE STRAPS OR TIE WIRE. USE ONLY CONTRACTOR APPROVED TAPES AND CABLE TIES TO SECURE THE CABLE TO THE PIPE.
10. DO NOT ATTEMPT TO REPAIR OR ENERGIZE DAMAGED CABLE. REMOVE DAMAGED SECTIONS AT ONCE AND REPLACE THEM WITH A NEW LENGTH USING THE APPROPRIATE SPLICE KIT. REPLACE DAMAGED COMPONENTS.
11. RE-USE OF THE GROMMET, OR USE OF THE WRONG GROMMET, CAN CAUSE LEAKS, CRACKED COMPONENTS, SHOCK OR FIRE. BE SURE THE NEW TYPE OF GROMMET IS CORRECT FOR THE HEATING CABLE BEING INSTALLED. USE A NEW GROMMET WHEN EVER THE CABLE HAS BEEN PULLED OUT OF THE TERMINATION.
12. KETONES AND AMINES CAN DISSOLVE THE CORRUGATED PROTECTIVE TUBING. PROTECT THE TUBING FROM EXPOSURE TO THESE CHEMICALS WHEREVER THEY MAY BE PRESENT.
13. EXTEND HEAT TRACE LOOP 18" BELOW FROST LINE. TERMINATE LOOP 1' ABOVE GRADE.

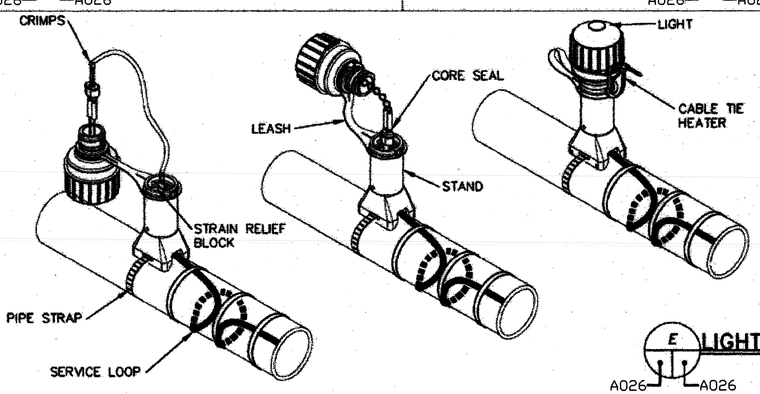

A026 — A026

LIGHTED END SEAL

SCALE: NTS.

E DRAWING SYMBOL

REV	DRW	CHKR	RE	TR	APPD	DATE
1	KTW	RAF	JB	X	KAS	10/2/17

REV.	FA1		
DRW.	Robin Flowers	12/8/16
CHKR.	Tim Gross	12/8/16
R.E.	Tim Gross	12/8/16
T. R.	CLAY SLUSMEYER	12/8/16
APPD.	Karen Sizemore	12/12/16
DRAWING APPROVALS		DATE

PRIORITY 3

LPE

STATE OF KENTUCKY — R. CLAY SLUSMEYER 23421 — LICENSED PROFESSIONAL ENGINEER

R.C. Slusmeyer

DATE: 10/2/2017

PROFESSIONAL SEAL

REV.	DATE	DESCRIPTION	DRAWN BY	CHKD BY	PROJ ENGR	LEAD ENGR	CONT ENGR/ MANG. ENTY	PROD MGR	CONS MGR
1		AS BUILT ENTIRE DRAWING FOR ESO FA1951	X	X	X	X	X	X	X
FA1	12/8/16	CERTIFIED FOR CONSTRUCTION FOR ESO FA1951	RAF	TG	CS	TG	---	---	KAS
0	11/28/16	ISSUED FOR CONSTRUCTION	TPW	RAF	JB	JB	KAS	[illegible]	

DRAWING REVISIONS

FLUOR. PADUCAH DEACTIVATION PROJECT
DOE Prime Contract #DE-DT0007774

U.S. DEPARTMENT OF ENERGY
PADUCAH, PORTSMOUTH PROJECT OPERATIONS, PADUCAH GASEOUS DIFFUSION PLANT

LATA Environmental Services of Kentucky, LLC — managed for the DEPARTMENT OF ENERGY under U.S. GOVERNMENT contract DE-AC30-10CC40020 Paducah, Kentucky

DOE CONTRACT NO. DE-AC30-10CC40020

PROJECT NAME: NE PLUME OPTIMIZATION

TITLE: C-765-A HEAT TRACE DETAILS

EDCS CAD FILENAME	BUILDING	PLANT	CLASS
E7DC7650AA026 rev FA1.DWG	C-765-A	PDGP	U

SCALE:	DRAWING NUMBER	REV
N/A	E7DC7650AA026	1

P:\LATA ENVIRONMENTAL SERVICES OF KENTUCKY\11105.07 NE PLUME 2013 DESIGN\DRAFTING- DIS\CADD\06-ELECT\49 - E7DC7650AA026 - C-765-A HEAT-TAPE.DWG

AV	AIR OPERATED VALVE
ABV	AIR VENT BALL VALVE
BA	BALL VALVE
BLV	BYPASS LOOP (RECYCLE) VALVE
BV	BUTTERFLY VALVE
CV	CHECK VALVE
D	DRAIN VALVE
DIPS	DUCTILE IRON PIPE SIZE
DPT	DIFFERENTIAL PRESSURE TRANSMITTER
EQ	EQUALIZATION
EW	EXTRACTION WELL
FAL	FLOW ALARM LOW
FE	FLOW ELEMENT
FI	FLOW INDICATOR
FQI	FLOW INDICATING TOTALIZER
FQIT	FLOW INDICATING TOTALIZER TRANSMITTER
FM	FLOW METER
GAC	GRANULAR ACTIVATED CARBON
HDPE	HIGH–DENSITY POLYETHYLENE
HOA	HAND–OFF–AUTO
HS	HAND SWITCH
IPS	IRON PIPE SIZE
KQI	RUN TIME TOTALIZER
LAHH	LEVEL ALARM HIGH–HIGH
LC	LEVEL CONTROL
LE	LEVEL ELEMENT
LI	LEVEL INDICATOR
LIT	LEVEL INDICATING TRANSMITTER
LSHH	LEVEL SWITCH HIGH–HIGH
MV	MOTORIZED VALVE
PAH	PRESSURE ALARM HIGH
PALL	PRESSURE ALARM LOW–LOW
PI	PRESSURE INDICATOR
PS	PRESSURE SWITCH
PT	PRESSURE TRANSMITTER
PVC	POLYVINYL CHLORIDE
SIC	SPEED INDICATING CONTROL
SP	SAMPLE PORT
VFD	VARIABLE FREQUENCY DRIVE
XA	MOTOR ALARM
XC	MOTOR ENABLE
XS	MOTOR STATUS
YIC	EVENT INDICATING CONTROL
ZA	POSITION ALARM
ZI	POSITION INDICATION

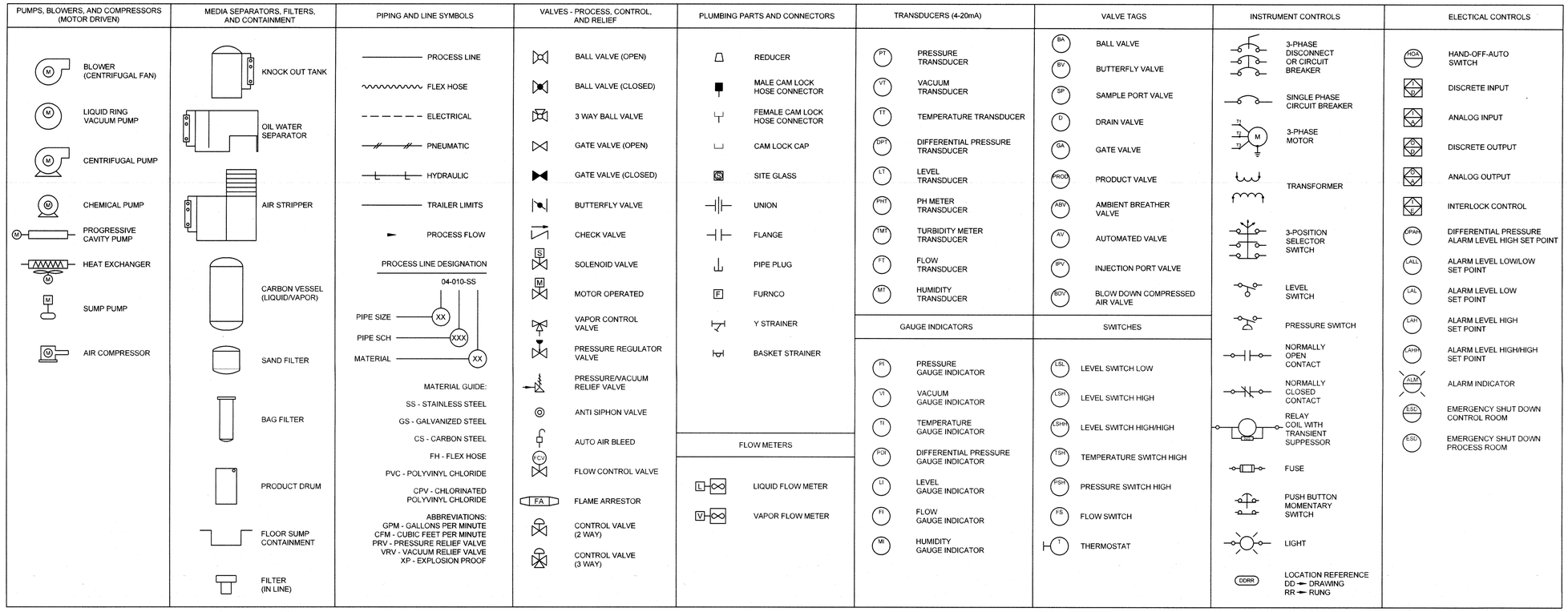

NOTE: LEGEND IS A STANDARD MECHANICAL LEGEND. NOT ALL ITEMS OR EQUIPMENT AS DESIGNATED HEREON ARE USED ON THIS PROJECT.

PRIORITY 3

REV.	FA1	
DRW.	R.FLOWERS	12/8/16
CHKR.	J.BLAGG	12/8/16
R.E.	J.BLAGG	12/8/16
T.R.	P.L.SPEES	12/9/16
APPD.	K.A.SIZEMORE	12/12/16
DRAWING APPROVALS		DATE

REV	DRW	CHKR	RE	TR	APPD	DATE
1	KTW	JBW	JBW	X	KAS	10/2/17

FLUOR. PADUCAH DEACTIVATION PROJECT
DOE Prime Contract #DE-DT0007774

LPE

STATE OF KENTUCKY
KAREN A. SIZEMORE
21059
LICENSED PROFESSIONAL ENGINEER

10/2/17

DATE:

PROFESSIONAL SEAL

REV.	DATE	DESCRIPTION	DRAWN BY	DRAFT CHK	PROJ ENGR	LEAD ENGR	CONF CTRL/ NUCL SFTY	FAC MGR	E&TS MGR
1	X	AS–BUILT ENTIRE DRAWING FOR ESO FA1951	X	X	X	X	X	X	X
FA1	X	CERTIFIED FOR CONSTRUCTION FOR ESO FA1951	X	X	X	X	X	X	X
0	11/26/13	ISSUED FOR CONSTRUCTION	TCW	NB	BK	TS		DLC	KAF

DRAWING REVISIONS

LATA Environmental Services of Kentucky, LLC managed for the DEPARTMENT OF ENERGY under U.S. GOVERNMENT contact DE–AC30–10CC40020 Paducah, Kentucky

DOE CONTRACT NO. DE–AC30–10CC40020

PROJECT NAME:
NE PLUME OPTIMIZATION

TITLE:
LEGENDS AND ABBREVIATIONS

EDCS CAD FILENAME	BUILDING	PLANT	CLASS
G7DC7650AA002 REV1.DWG	C–765	PGDP	U

SCALE:	DRAWING NUMBER	REV
N/A	G7DC7650AA002	1

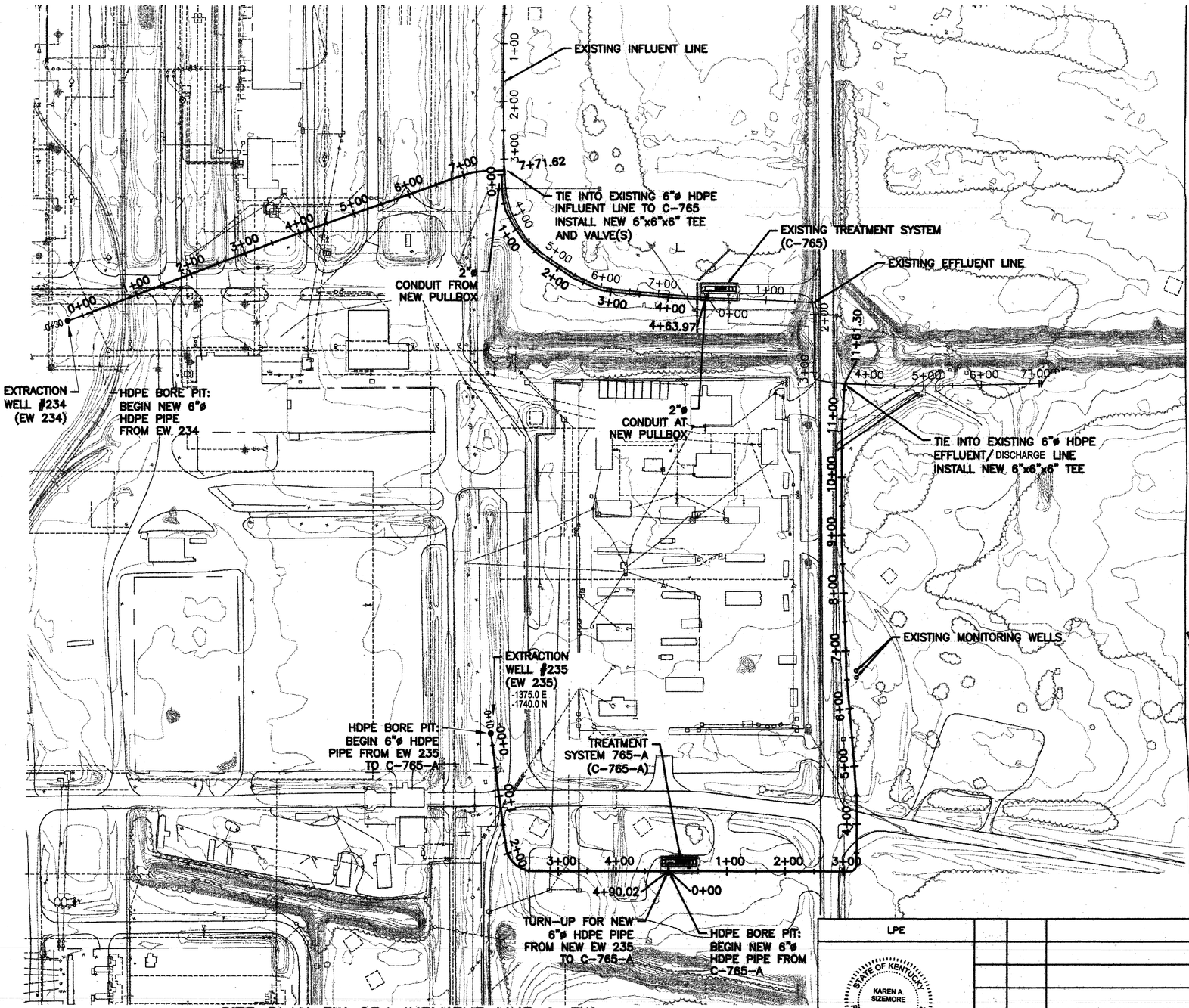

SITE PLAN EW 234 INFLUENT LINE & EW 235 INFLUENT/EFFLUENT LINE(S) AND TREATMENT SYSTEM C-765-A

SCALE: 1" = 100'
(SCALE FOR DRAWING FROM 22" X 34")
0 50' 100' 150' 200'

SECTION NUMBER OR DETAIL LETTER
DRAWING ON WHICH SECTION OR DETAIL IS TAKEN
DRAWING ON WHICH SECTION OR DETAIL IS SHOWN
SECTION AND DETAIL KEY

"NO REPRESENTATION OR WARRANTY, EXPRESSED OR IMPLIED, IS MADE THAT THE USE OR DISCLOSURE OF ANY INFORMATION, APPARATUS, METHOD OR PROCESS DISCLOSED IN THESE DRAWINGS MAY NOT INFRINGE PRIVATE RIGHTS OF OTHERS. NO LIABILITY IS ASSUMED WITH RESPECT TO THE USE OF OR FOR DAMAGES RESULTING FROM THE USE ANY INFORMATION, APPARATUS, METHOD OR PROCESS DISCLOSED IN THESE DRAWINGS. THE DRAWINGS ARE BEING MADE FOR INFORMATION TO BIDDERS AND ARE NOT TO BE USED FOR OTHER PURPOSES, AND ARE TO BE RETURNED UPON REQUEST OF THE FORWARDING CONTRACTOR."

REV	DRW	CHKR	RE	TR	APPD	DATE
1	KTW	JAW/JAW	X	KAS	12/12/17	

REV.	FA1	
DRW.	K.T.WELSH	12/7/16
CHKR.	T.A.WALKER	12/9/16
R.E.	T.A.WALKER	12/9/16
T.R.	N/A	
APPD.	K.A.SIZEMORE	12/12/16
DRAWING APPROVALS		DATE

FLUOR. PADUCAH DEACTIVATION PROJECT
DOE Prime Contract #DE-DT0007774

PRIORITY 3

LPE

STATE OF KENTUCKY
KAREN A. SIZEMORE
21059
LICENSED PROFESSIONAL ENGINEER

Karen Sizemore 10/2/17

DATE:
PROFESSIONAL SEAL

REV.	DATE	DESCRIPTION	DRAWN BY	DRAFT CHK	PROJ ENGR	LEAD ENGR	CONF CTRL/ HAZL SFTY	FAC MGR	ENTR MGR
1	X	AS-BUILT ENTIRE DRAWING FOR ESO FA1951	X	X	X	X	X	X	X
FA1	X	CERTIFIED FOR CONSTRUCTION FOR ESO FA1951	X	X	X	X	X	X	X
0	11/25/13	ISSUED FOR CONSTRUCTION	KCL	SB	GL	TP	NS	[illegible]	[illegible]

DRAWING REVISIONS

U.S. DEPARTMENT OF ENERGY
PADUCAH, PORTSMOUTH PROJECT OPERATIONS, PADUCAH GASEOUS DIFFUSION PLANT

LATA Environmental Services of Kentucky, LLC managed for the DEPARTMENT OF ENERGY under U.S. GOVERNMENT contract DE-AC30-10CC40020 Paducah, Kentucky

DOE CONTRACT NO. DE-AC30-10CC40020

PROJECT NAME:
NE PLUME OPTIMIZATION

TITLE:
SITE PLAN
EW 235 LINE,
EW 234 LINE(S) AND C-765-A

EDCS CAD FILENAME	BUILDING	PLANT	CLASS
G7DC7650AA003rev1.dwg	C-765-A	PDGP	U

SCALE:	DRAWING NUMBER	REV
N/A	G7DC7650AA003	1

P:\LATA ENVIRONMENTAL SERVICES OF KENTUCKY\11105.07 NE PLUME 2013 DESIGN\DRAFTING- GIS\CADD\02-GENERAL\03 - G7DC7650AA003 - SITE.DWG

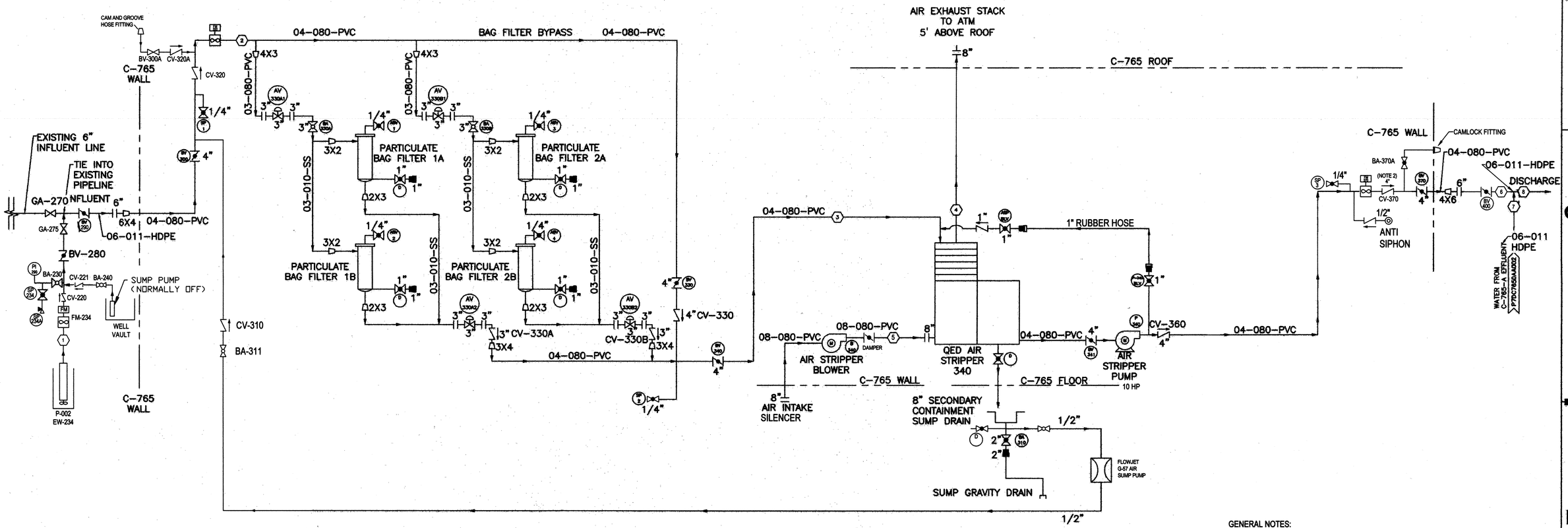

GENERAL NOTES:

1. INSTALL FLOW METER IN ACCORDANCE WITH THE MANUFACTURER'S INSTALLATION INSTRUCTIONS.
2. CV-370 SHALL BE INSTALLED DOWNSTREAM OF THE EFFLUENT FLOW METER (MINIMUM 20") IN THE HORIZONTAL RUN OF PIPE.
3. ALL ABOVE GROUND PIPING SHALL BE INSULATED WITH 2" FIBERGLASS PIPE INSULATION IN ACCORDANCE WITH TECHNICAL SPECIFICATION 22 07 00. ALUMINUM JACKETING SHALL BE INSTALLED OVER INSULATION.

REV	DRW	CHKR	RE	TR	APPD	DATE
1	BC	CD	CD	X	KAS	10/6/17

PRIORITY 3

REV.	FA2	
DRW.	R.FLOWERS	5/2/17
CHKR.	J.FLEMING	5/2/17
R. E.	J.FLEMING	5/2/17
T. R.	N/A	
APPD.	K.A.SIZEMORE	5/3/17
DRAWING APPROVALS		DATE

STREAM NO. / COMPONENT		1 P-001 DISCHARGE	2 BAG FILTERS INFLUENT	3 AIR STRIPPER INFLUENT	4 AIR FROM STRIPPER	5 AIR TO STRIPPER	6 C-765 EFFLUENT	7 C-765-A EFFLUENT TIE-IN	8 DISCHARGE TO OUTFALL 001
MASS FLOW:									
AIR	lb/hr	0	0	0	5,689	5,689	0	0	0
H2O	lb/hr	100,066	100,066	100,066	85.3	41.8	100,022	75,007	175,029
TCE	lb/hr	0.1001	0.1001	0.1001	0.09994	0	0.00019	0.00012	0.00031
TOTAL MASS FLOW	lb/hr	100,066	100,066	100,066	5,774	5,731	100,022	75,007	175,029
VOLUME FLOW	gpm (cfm)	200	200	200	(1,306)	(1,300)	200	150	350
TCE CONCENTRATION, MAX	ppb (ppmV)	1,000	1,000	1,000	(3.665)	0	22.5	22.5	22.5
TEMPERATURE	°F	58	58	58	58	0	58	58	58
PRESSURE, MAX	psig	130	15 psid	0	(5)	AMBIENT	10	10	0

LPE

STATE OF KENTUCKY — CLINTON T. DIETSCH — 31658 — LICENSED PROFESSIONAL ENGINEER

Clinton Dietsch

DATE: 10-9-17

PROFESSIONAL SEAL

REV.	DATE	DESCRIPTION	DRAWN BY	DRAFT CHK	PROJ ENGR	LEAD ENGR	CONF CTRL/ NUCL SFTY	FAC MGR	EN/TS MGR
1	X	AS-BUILT ENTIRE DRAWING FOR ESO FA1951	X	X	X	X	X	X	X
FA2	X	CERTIFIED FOR CONSTRUCTION FOR ESO FA1951 FOR ECR-2017-0003	X	X	X	X	X	X	X
FA1	12/12/16	CERTIFIED FOR CONSTRUCTION FOR ESO FA1951	RAF	JF	CD	KAS	X	X	X
0	11/28/16	ISSUED FOR CONSTRUCTION	RF	TH	BK	JB	SKS	JCL	KAS

DRAWING REVISIONS

FLUOR.

PADUCAH DEACTIVATION PROJECT
DOE Prime Contract #DE-DT0007774

U.S. DEPARTMENT OF ENERGY
PADUCAH, PORTSMOUTH PROJECT OPERATIONS, PADUCAH GASEOUS DIFFUSION PLANT

LATA Environmental Services of Kentucky, LLC managed for the DEPARTMENT OF ENERGY under U.S. GOVERNMENT contract DE-AC30-10CC40020 Paducah, Kentucky

DOE CONTRACT NO. DE-AC30-10CC40020

PROJECT NAME:
NE PLUME OPTIMIZATION

TITLE:
PROCESS FLOW DIAGRAM
EXTRACTION WELL 234 SYSTEM

EDCS CAD FILENAME	BUILDING	PLANT	CLASS
P7DC7650AA001 rev1.dwg	C-765	PDGP	U

SCALE:	DRAWING NUMBER	REV
N/A	P7DC7650AA001	1

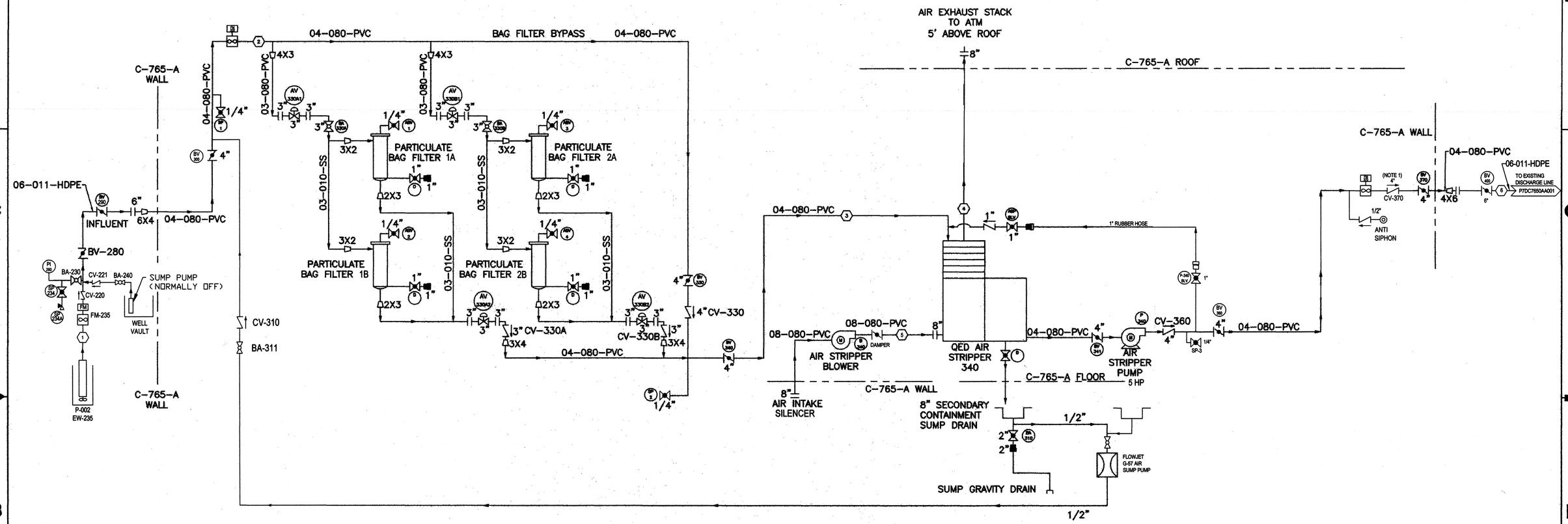

GENERAL NOTES:

1. CV-370 SHALL BE INSTALLED DOWNSTREAM OF THE EFFLUENT FLOW METER (MINIMUM 20") IN THE HORIZONTAL RUN OF PIPE.
2. ALL ABOVEGROUND PIPING SHALL BE INSTALLED WITH 2" FIBERGLASS PIPE INSULATION IN ACCORDANCE WITH TECHNICAL SPECIFICATION 22 07 00. ALUMINUM JACKETING SHALL BE INSTALLED OVER INSULATION.

REV	DRW	CHKR	RE	TR	APPD	DATE
1	BR	CTD	CTD	X	KAS	10/4/17

PRIORITY 3

REV.	FA2	
DRW.	R.FLOWERS	5/2/17
CHKR.	J.FLEMING	5/2/17
R. E.	J.FLEMING	5/2/17
T. R.	N/A	
APPD.	K.A.SIZEMORE	5/3/17
DRAWING APPROVALS		DATE

STREAM NO. / COMPONENT		1 P-002 DISCHARGE	2 BAG FILTERS 330A/B/C INFLUENT	3 AIR STRIPPER INFLUENT	4 AIR FROM STRIPPER	5 AIR TO STRIPPER	6 C-765-A EFFLUENT
MASS FLOW:							
AIR	lb/hr	0	0	0	5,689	5,689	0
H2O	lb/hr	75,050	75,050	75,050	85.3	41.8	75,007
TCE	lb/hr	0.0750	0.0750	0.0750	0.07488	0	0.00012
TOTAL MASS FLOW	lb/hr	75,050	75,050	75,050	5,774	5,731	75,007
VOLUME FLOW	gpm (cfm)	150	150	150	(1,306)	(1,300)	150
TCE CONCENTRATION, MAX	ppb (ppmV)	1,000	1,000	1,000	(3.665)	0	22.5
TEMPERATURE	°F	58	58	58	58	AMBIENT	58
PRESSURE, MAX	psig	130	15 psid	0	(5)	(25)	10

LPE

STATE OF KENTUCKY
CLINTON T. DIETSCH
31658
LICENSED PROFESSIONAL ENGINEER

DATE: 10-9-17

PROFESSIONAL SEAL

REV.	DATE	DESCRIPTION	DRAWN BY	DRAFT CHK	PROJ ENGR	LEAD ENGR	CONF CTRL/ NUCL SFTY	FAC MGR	EQUIP MGR
1	X	AS-BUILT ENTIRE DRAWING FOR ESO FA1951	X	X	X	X	X	X	X
FA2	X	CERTIFIED FOR CONSTRUCTION FOR ESO FA1951 FOR ECR-2017-0003	X	X	X	X	X	X	X
FA1	12/12/16	CERTIFIED FOR CONSTRUCTION FOR ESO FA1951	RAF	JF	CD	KAS	X	X	X
0	11/28/16	ISSUED FOR CONSTRUCTION	BR	TH	BR	KS	JCT	DEJ	KAS

DRAWING REVISIONS

FLUOR. PADUCAH DEACTIVATION PROJECT
DOE Prime Contract #DE-DT0007774

U.S. DEPARTMENT OF ENERGY
PADUCAH, PORTSMOUTH PROJECT OPERATIONS,
PADUCAH GASEOUS DIFFUSION PLANT

LATA Environmental Services of Kentucky, LLC managed for the DEPARTMENT OF ENERGY under U.S. GOVERNMENT contract DE-AC30-10CC40020 Paducah, Kentucky

DOE CONTRACT NO. DE-AC30-10CC40020

PROJECT NAME:
NE PLUME OPTIMIZATION

TITLE:
PROCESS FLOW DIAGRAM
EXTRACTION WELL 235 SYSTEM

EDCS CAD FILENAME	BUILDING	PLANT	CLASS
P7DC7650AA002 rev1.dwg	C-765-A	PDGP	U

SCALE:	DRAWING NUMBER	REV
N/A	P7DC7650AA002	1

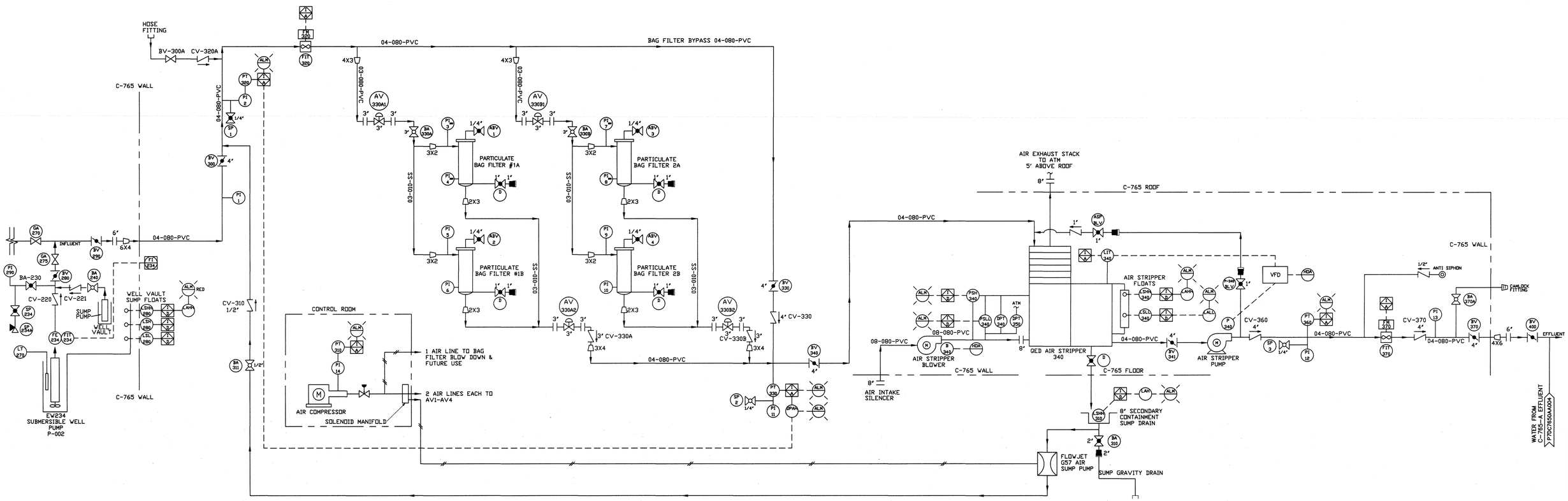

INSTRUMENT	SCALE	UNITS	PID NO.
PRESSURE TRANSMITTER (PT)	0–200	PSI	PT310, PT320, PT330
	0–100	PSI	PT360
PRESSURE GAUGE (PI)	0–200	PSI	PI1–PI11, PI14, PI290
	0–100	PSI	PI12–PI13
DIFFERENTIAL PRESSURE TRANSMITTER (DPT)	0–50	IWC	DPT340
	0–25	IWC	DPT350
LEVEL TRANSMITTER (LT)	0–100	IWC	LIT340
	0–100	FWC	LT270
FLOW TRANSMITTER (FT)	0–400	GPM	FIT320, FIT370
	0–250	GPM	FIT234

REV	DRW	CHKR	R.E.	T.R.	APPD	DATE
1	KTW	JLB	JLB	X	KAS	10/9/17

REV. FA2		
DRW.	B.RUSHING	5/3/17
CHKR.	J.BLAGG	5/3/17
R.E.	J.BLAGG	5/3/17
T.R.	N/A	
APPD.	K.SIZEMORE	5/3/17
DRAWING APPROVALS		DATE

PRIORITY 2

LPE

STATE OF KENTUCKY PHILIP LYNN SPEES 13543 LICENSED PROFESSIONAL ENGINEER

P. L. Spees 10-9-17

DATE:

PROFESSIONAL SEAL

REV.	DATE	DESCRIPTION	DRAWN BY	DRAFT CHK	PROJ ENGR	LEAD ENGR	CONF CTRL/ NUCL SFTY	FAC MGR	E&TS MGR
1	X	AS-BUILT ENTIRE DRAWING FOR ESO FA1951, INC. ECR-2017-0003	X	X	X	X	X	X	X
FA2	X	CERTIFIED FOR CONSTRUCTION FOR ESO FA1951/ ECR-2017-0003	X	X	X	X	X	X	
FA1	12/12/16	CERTIFIED FOR CONSTRUCTION FOR ESO FA1951	RF	JB	PS	KAS	—	X	X
0	11/28/13	ISSUED FOR CONSTRUCTION	RV	TH	BN	TS	—	DLC	KAF

DRAWING REVISIONS

FLUOR.

PADUCAH DEACTIVATION PROJECT
DOE Prime Contract #DE-DT0007774

U.S. DEPARTMENT OF ENERGY
PADUCAH, PORTSMOUTH PROJECT OPERATIONS,
PADUCAH GASEOUS DIFFUSION PLANT

LATA Environmental Services of Kentucky, LLC managed for the DEPARTMENT OF ENERGY under U.S. GOVERNMENT contact DE-AC30-10CC40020 Paducah, Kentucky

DOE CONTRACT NO. DE-AC30-10CC40020

PROJECT NAME:
NE PLUME OPTIMIZATION

TITLE:
TREATMENT SYSTEM 234
PROCESS AND INSTRUMENTATION DIAGRAM

EDCS CAD FILENAME	BUILDING	PLANT	CLASS
P7DC7650AA003 REV1.DWG	C-765	PDGP	U

SCALE:	DRAWING NUMBER	REV
N/A	P7DC7650AA003	1

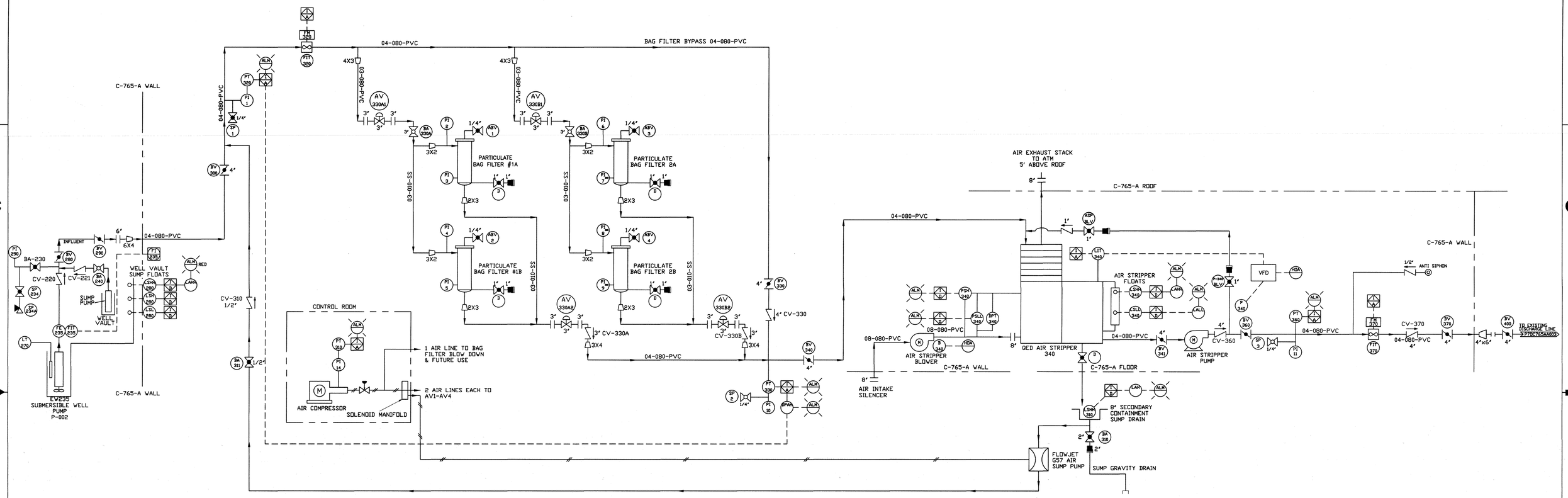

INSTRUMENT	SCALE	UNITS	PID NO.
PRESSURE TRANSMITTER (PT)	0–200	PSI	PT310, PT320, PT330
	0–100	PSI	PT360
PRESSURE GAUGE (PI)	0–200	PSI	PI1, PI10, PI14, PI290
	0–100	PSI	PI11
	0–60	PSI	PI2 – PI9
DIFFERENTIAL PRESSURE TRANSMITTER (DPT)	0–25	IWC	DPT340
LEVEL TRANSMITTER (LT)	0–100	IWC	LIT340
	0–100	FWC	LT270
FLOW TRANSMITTER (FT)	0–400	GPM	FIT320, FIT370
	0–250	GPM	FIT235

REV	DRW	CHKR	R.E.	T.R.	APPD	DATE
1	KTW	QMB	QMB	X	KAS	10/9/17

PRIORITY 3

REV.	FA2	
DRW.	B.RUSHING	5/3/17
CHKR.	J.BLAGG	5/3/17
R.E.	J.BLAGG	5/3/17
T.R.	N/A	
APPD.	K.SIZEMORE	5/3/17
DRAWING APPROVALS		DATE

LPE

STATE OF KENTUCKY PHILIP LYNN SPEES 13543 LICENSED PROFESSIONAL ENGINEER

P. L. Spees 10-9-17

DATE:

PROFESSIONAL SEAL

REV.	DATE	DESCRIPTION	DRAWN BY	DRAFT CHK	PROJ ENGR	LEAD ENGR	CONF CTRL/ NUCL SFTY	FAC MGR	E&TS MGR
1	X	AS-BUILT ENTIRE DRAWING FOR ESO FA1951, INC. ECR-2017-0003	X	X	X	X	X	X	X
FA2	X	CERTIFIED FOR CONSTRUCTION FOR ESO FA1951/ ECR-2017-0003	X	X	X	X	X	X	
FA1	12/12/16	CERTIFIED FOR CONSTRUCTION FOR ESO FA1951	RF	JB	PS	KAS	—	X	X
0	11/26/13	ISSUED FOR CONSTRUCTION	RV	TH	BN	TS		DLC	KAF

DRAWING REVISIONS

FLUOR.

PADUCAH DEACTIVATION PROJECT
DOE Prime Contract #DE-DT0007774

U.S. DEPARTMENT OF ENERGY
PADUCAH, PORTSMOUTH PROJECT OPERATIONS,
PADUCAH GASEOUS DIFFUSION PLANT

LATA Environmental Services of Kentucky, LLC managed for the DEPARTMENT OF ENERGY under U.S. GOVERNMENT contact DE-AC30-10CC40020 Paducah, Kentucky

DOE CONTRACT NO. DE-AC30-10CC40020

PROJECT NAME:
NE PLUME OPTIMIZATION

TITLE:
TREATMENT SYSTEM 235
PROCESS AND INSTRUMENTATION DIAGRAM

EDCS CAD FILENAME	BUILDING	PLANT	CLASS
P7DC7650AA004 REV1.DWG	C-765-A	PDGP	U

SCALE:	DRAWING NUMBER	REV
N/A	P7DC7650AA004	1

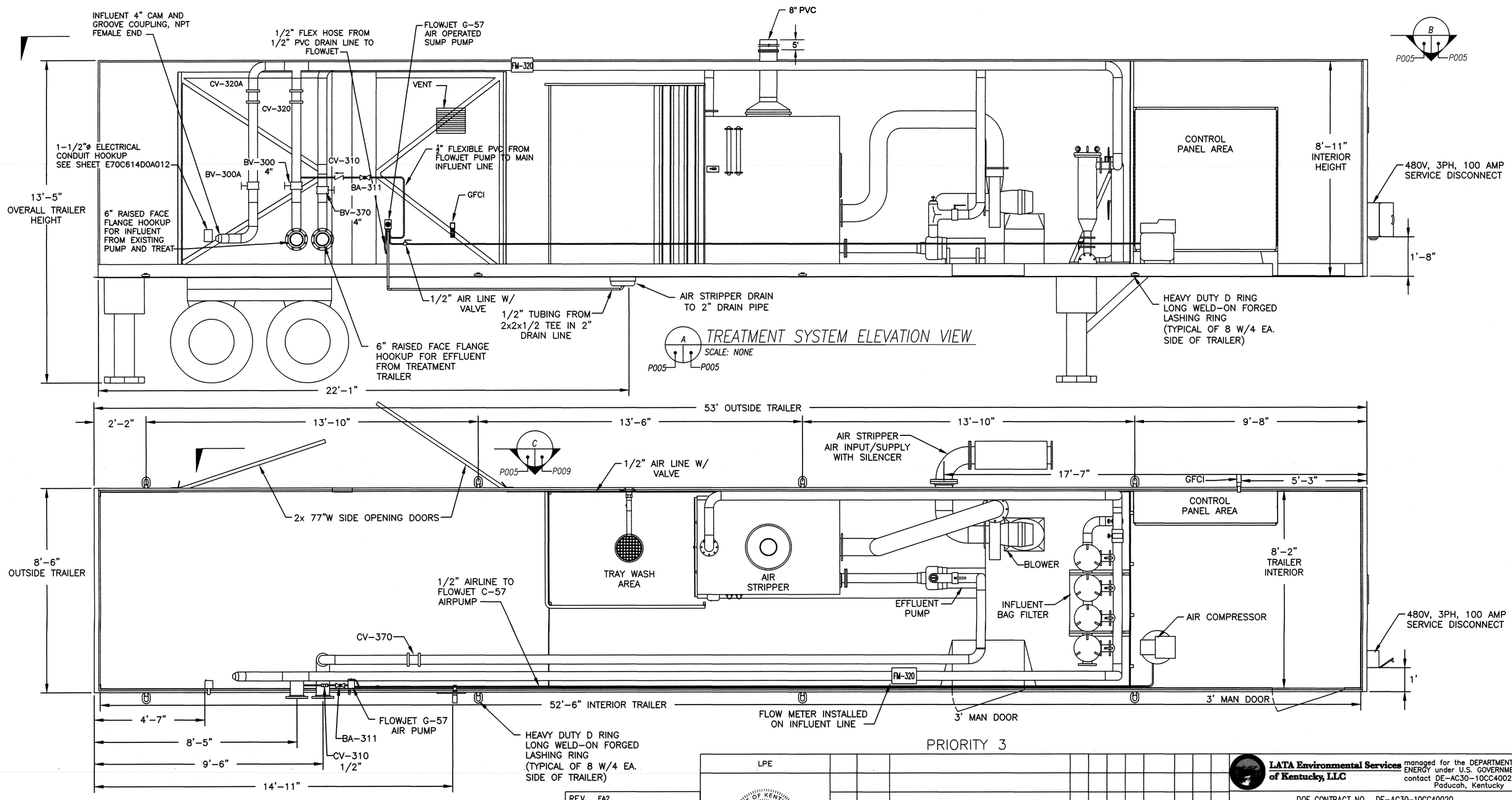

PRIORITY 3

NOTES:

1.
2. FIELD ROUTE TUBING AS NECESSARY
3. FIELD FIT AS NECESSARY. DIMENSIONS ARE APPROXIMATE FOR MODIFICATIONS
4. NEW EFFLUENT MODIFICATION CONNECTION NOT SHOWN FOR CLARITY. REFER TO P7DC7650A009

REV	DRW	CHKR	RE	TR	APPD	DATE
1	RAF	JAF	JAF	X	KAS	10/2/17

REV. FA2		
DRW. R.FLOWERS	5/2/17	
CHKR. J.FLEMING	5/2/17	
R. E. J.FLEMING	5/2/17	
T. R. N/A		
APPD. K.A.SIZEMORE	5/3/17	
DRAWING APPROVALS	DATE	

FLUOR. PADUCAH DEACTIVATION PROJECT
DOE Prime Contract #DE-DT0007774

LPE

STATE OF KENTUCKY CLINTON T. DIETSCH 31658 LICENSED PROFESSIONAL ENGINEER

Clinton T. Dietsch 10/2/17

DATE:

PROFESSIONAL SEAL

REV.	DATE	DESCRIPTION	DRAWN BY	DRAFT CHK	PROJ ENGR	LEAD ENGR	CONF CTRL/ NUCL SFTY	FAC MGR	E&TS MGR
1	X	AS-BUILT ENTIRE DRAWING FOR ESO FA1951	X	X	X	X	X	X	X	X
FA2	X	CERTIFIED FOR CONSTRUCTION FOR ESO FA1951 FOR ECR-2017-0003	X	X	X	X	X	X	X
FA1	12/12/16	CERTIFIED FOR CONSTRUCTION FOR ESO FA1951	RAF	JF	CD	KAS	X	X	X
0	11/25/13	ISSUED FOR CONSTRUCTION	TCW	NB	BK	TS			

DRAWING REVISIONS

LATA Environmental Services of Kentucky, LLC managed for the DEPARTMENT OF ENERGY under U.S. GOVERNMENT contact DE-AC30-10CC40020 Paducah, Kentucky

DOE CONTRACT NO. DE-AC30-10CC40020

PROJECT NAME: NE PLUME OPTIMIZATION

TITLE: C-765 GENERAL ARRANGEMENT

EDCS CAD FILENAME	BUILDING	PLANT	CLASS
P7DC7650AA005 rev1	C-765	PDGP	U

SCALE:	DRAWING NUMBER	REV
N/A	P7DC7650AA005	1

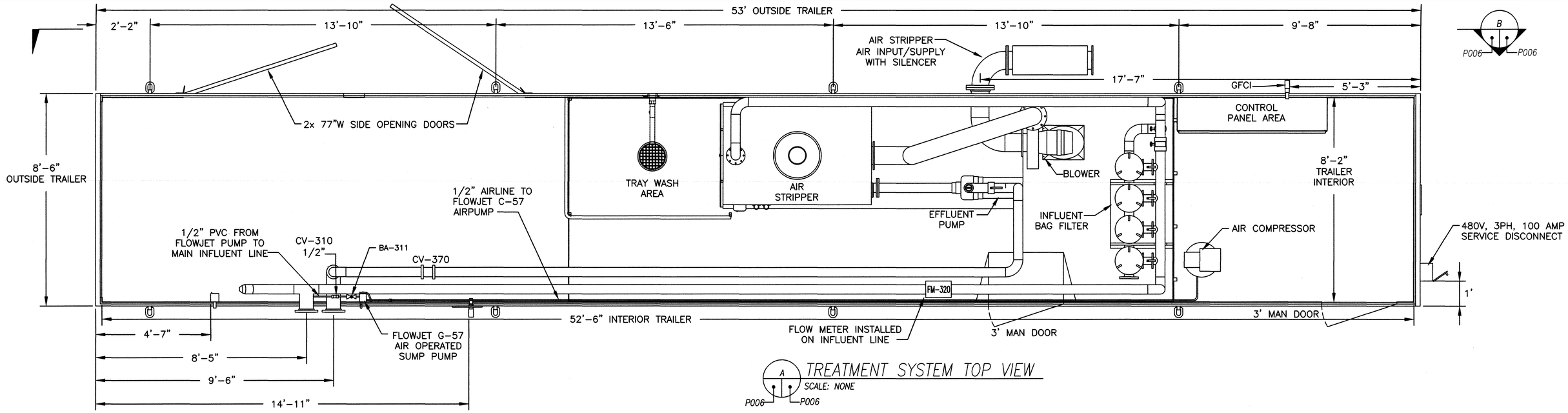

TREATMENT SYSTEM TOP VIEW

SCALE: NONE

A P006 P006

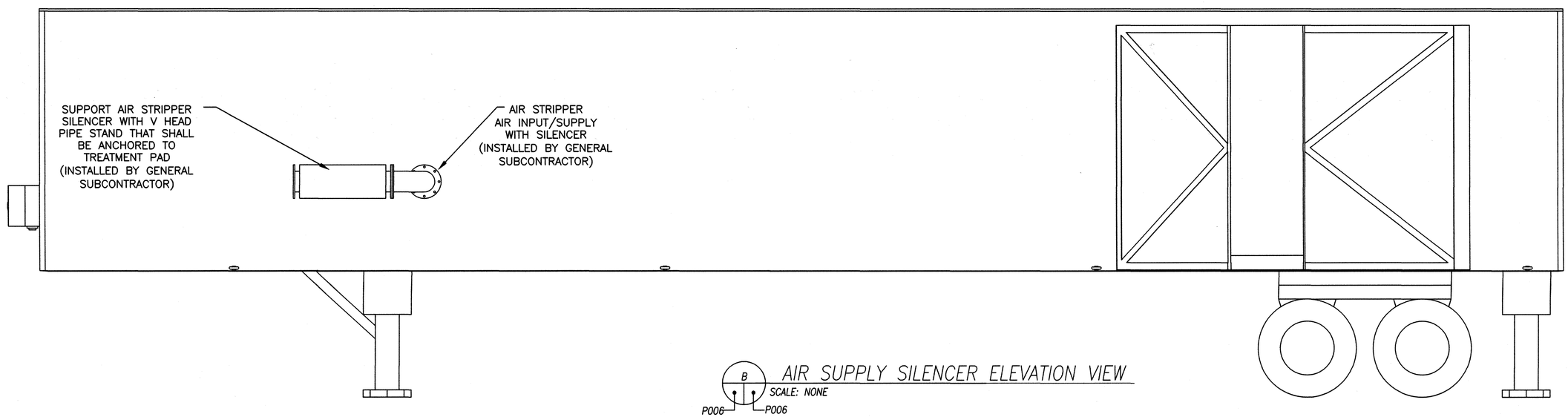

AIR SUPPLY SILENCER ELEVATION VIEW

SCALE: NONE

B P006 P006

PRIORITY 3

NOTES:

1.
2. FIELD ROUTE TUBING AS NECESSARY
3. FIELD FIT AS NECESSARY. DIMENSIONS ARE APPROXIMATE FOR MODIFICATIONS

REV	DRW	CHKR	RE	TR	APPD	DATE
1	RAF	JAF	JAF	X	KAS	10/24/17

REV.	FA2	
DRW.	R.FLOWERS	5/1/17
CHKR.	J.FLEMING	5/1/17
R.E.	J.FLEMING	5/1/17
T.R.	N/A	
APPD.	K.A.SIZEMORE	5/3/17
DRAWING APPROVALS		DATE

FLUOR. PADUCAH DEACTIVATION PROJECT DOE Prime Contract #DE-DT0007774

LPE

STATE OF KENTUCKY CLINTON T. DIETSCH 31658 LICENSED PROFESSIONAL ENGINEER

10/26/17

DATE:

PROFESSIONAL SEAL

REV.	DATE	DESCRIPTION	DRAWN BY	DRAFT CHK	PROJ ENGR	LEAD ENGR	CONF CTRL/ NUCL SFTY	FAC MGR	E&TS MGR
1	X	AS-BUILT ENTIRE DRAWING FOR ESO FA1951	X	X	X	X	X	X	X
FA2	X	CERTIFIED FOR CONSTRUCTION FOR ESO FA1951 FOR ECR-2017-0003	X	X	X	X	X	X	X
FA1	X	CERTIFIED FOR CONSTRUCTION FOR ESO FA1951	RAF	JF	CD	KAS	X	X	X
0	11/26/13	ISSUED FOR CONSTRUCTION	TKW	HB	GK	TS			

DRAWING REVISIONS

LATA Environmental Services of Kentucky, LLC managed for the DEPARTMENT OF ENERGY under U.S. GOVERNMENT contact DE-AC30-10CC40020 Paducah, Kentucky

DOE CONTRACT NO. DE-AC30-10CC40020

PROJECT NAME: NE PLUME OPTIMIZATION

TITLE: C-765 SILENCER ELEVATION VIEW

EDCS CAD FILENAME	BUILDING	PLANT	CLASS
P7DC7650AA006 REV1.DWG	C-765	PDGP	U

SCALE:	DRAWING NUMBER	REV
N/A	P7DC7650AA006	1

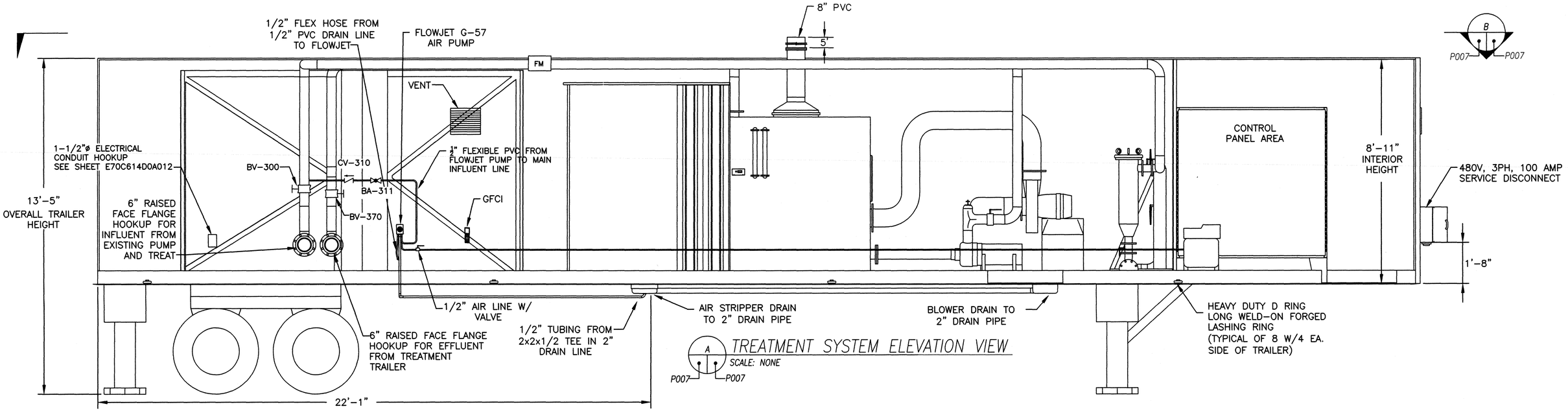

TREATMENT SYSTEM ELEVATION VIEW

A

SCALE: NONE

P007 P007

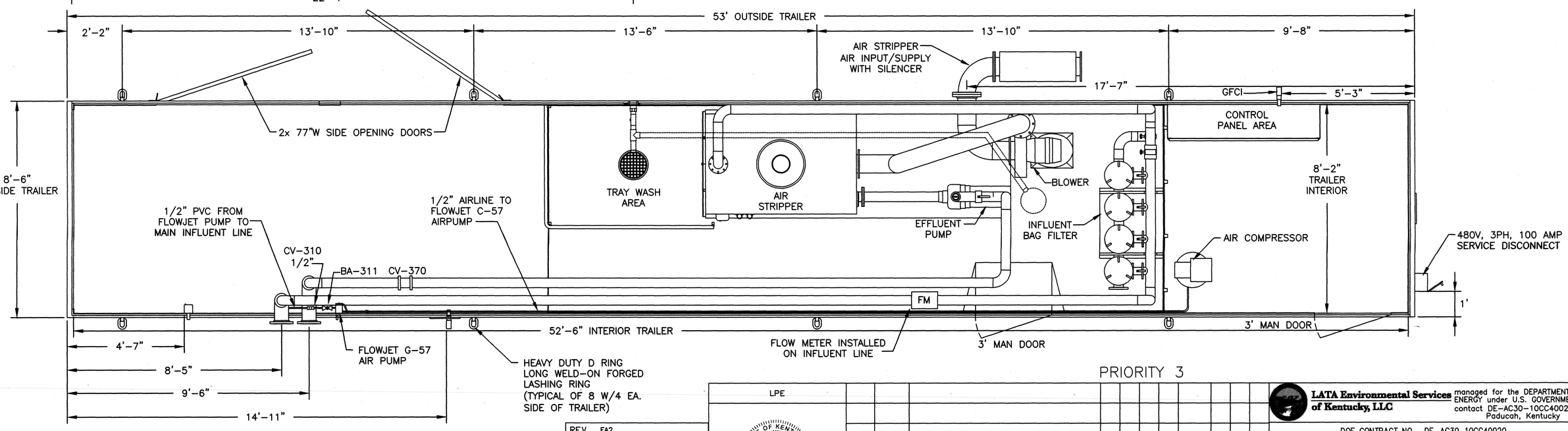

TREATMENT SYSTEM TOP VIEW

B

SCALE: NONE

P007 P007

NOTE:

1.

2. FIELD ROUTE TUBING AS NECESSARY

REV	DRW	CHKR	RE	TR	APPD	DATE
1	RAF	JAF	JAF	X	KAS	10/6/17

REV. FA2	
DRW. R.FLOWERS	5/1/17
CHKR. J.FLEMING	5/1/17
R.E. J.FLEMING	5/1/17
T. R. N/A	
APPD. K.A.SIZEMORE	5/3/17
DRAWING APPROVALS	DATE

FLUOR. PADUCAH DEACTIVATION PROJECT
DOE Prime Contract #DE-DT0007774

LPE

STATE OF KENTUCKY
CLINTON T. DIETSCH
31658
LICENSED PROFESSIONAL ENGINEER

Clinton T. Dietsch
10/6/17

DATE:

PROFESSIONAL SEAL

PRIORITY 3

REV.	DATE	DESCRIPTION	DRAWN BY	DRAFT CHK	PROJ ENGR	LEAD ENGR	CONF CTRL/ NUCL SFTY	FAC MGR	E&TS MGR
1	X	AS-BUILT ENTIRE DRAWING FOR ESO FA1951	X	X	X	X	X	X	X
FA2	X	CERTIFIED FOR CONSTRUCTION FOR ESO FA1951 FOR ECR-2017-0003	X	X	X	X	X	X	
FA1	X	CERTIFIED FOR CONSTRUCTION FOR ESO FA1951	RAF	JF	CD	KAS	X	X	X
0	11/26/13	ISSUED FOR CONSTRUCTION	TCS	NB	RK	TS			

DRAWING REVISIONS

LATA Environmental Services of Kentucky, LLC managed for the DEPARTMENT OF ENERGY under U.S. GOVERNMENT contact DE-AC30-10CC40020 Paducah, Kentucky

DOE CONTRACT NO. DE-AC30-10CC40020

PROJECT NAME:
NE PLUME OPTIMIZATION

TITLE:
C-765-A
GENERAL ARRANGEMENT

EDCS CAD FILENAME	BUILDING	PLANT	CLASS
P7DC7650AA007 REV1.DWG	C-765-A	PDGP	U

SCALE:	DRAWING NUMBER	REV
N/A	P7DC7650AA007	1

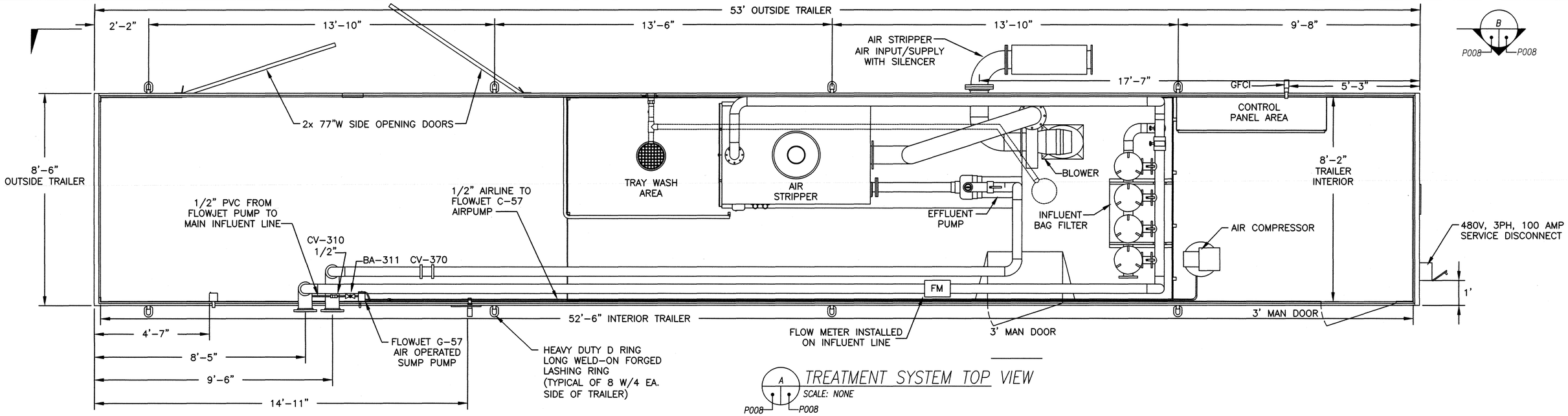

A TREATMENT SYSTEM TOP VIEW
SCALE: NONE
P008 P008

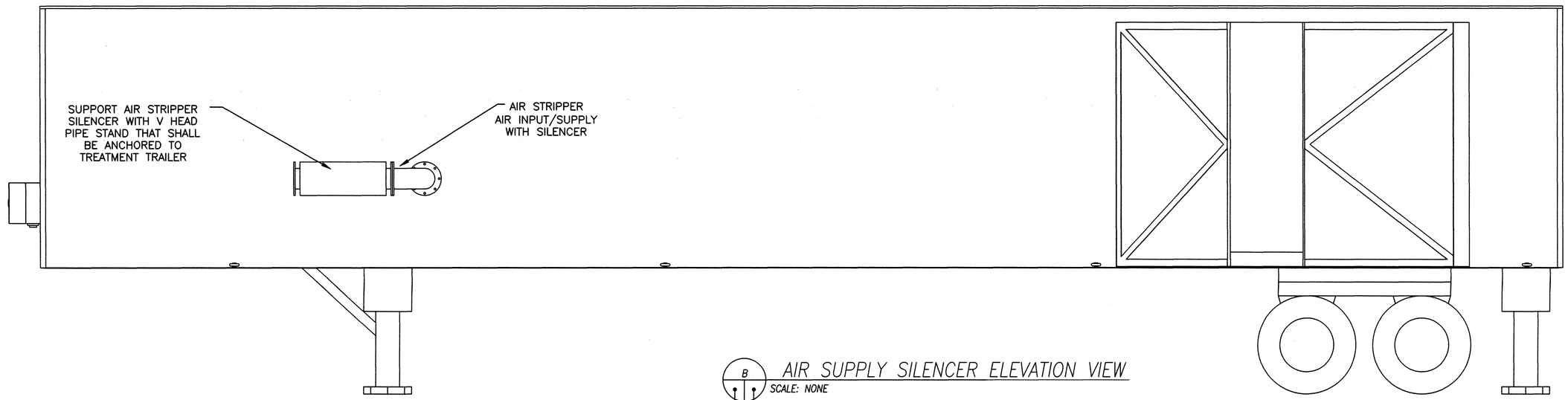

B AIR SUPPLY SILENCER ELEVATION VIEW
SCALE: NONE
P008 P008

PRIORITY 3

NOTE:

1.

2. FIELD ROUTE TUBING AS NECESSARY

REV	DRW	CHKR	RE	TR	APPD	DATE
1	RAF	JAF	JAF	X	KAS	10/2/17

REV.	FA2	
DRW.	R.FLOWERS	5/1/17
CHKR.	J.FLEMING	5/1/17
R.E.	J.FLEMING	5/1/17
T.R.	N/A	
APPD.	K.A.SIZEMORE	5/3/17
DRAWING APPROVALS		DATE

FLUOR.

PADUCAH DEACTIVATION PROJECT
DOE Prime Contract #DE-DT0007774

LPE

STATE OF KENTUCKY
CLINTON T. DIETSCH
31658
LICENSED PROFESSIONAL ENGINEER

Clinton T. Dietsch
10/2/17

DATE:

PROFESSIONAL SEAL

REV.	DATE	DESCRIPTION	DRAWN BY	DRAFT CHK	PROJ ENGR	LEAD ENGR	CONF CTRL/ NUCL SFTY	FAC MGR	E&TS MGR
1	X	AS-BUILT ENTIRE DRAWING FOR ESO FA1951	X	X	X	X	X	X	X
FA2	X	CERTIFIED FOR CONSTRUCTION FOR ESO FA1951 FOR ECR-2017-0003	X	X	X	X	X	X	X
FA1	X	CERTIFIED FOR CONSTRUCTION FOR ESO FA1951	RAF	JF	CD	KAS	X	X	X
0	11/28/13	ISSUED FOR CONSTRUCTION	TCW	NB	BN	TS			

DRAWING REVISIONS

LATA Environmental Services of Kentucky, LLC managed for the DEPARTMENT OF ENERGY under U.S. GOVERNMENT contact DE-AC30-10CC40020
Paducah, Kentucky

DOE CONTRACT NO. DE-AC30-10CC40020

PROJECT NAME:
NE PLUME OPTIMIZATION

TITLE:
C-765-A
SILENCER ELEVATION VIEW

EDCS CAD FILENAME	BUILDING	PLANT	CLASS
P7DC7650AA008 REV1.DWG	C-765-A	PDGP	U

SCALE:	DRAWING NUMBER	REV
N/A	P7DC7650AA008	1