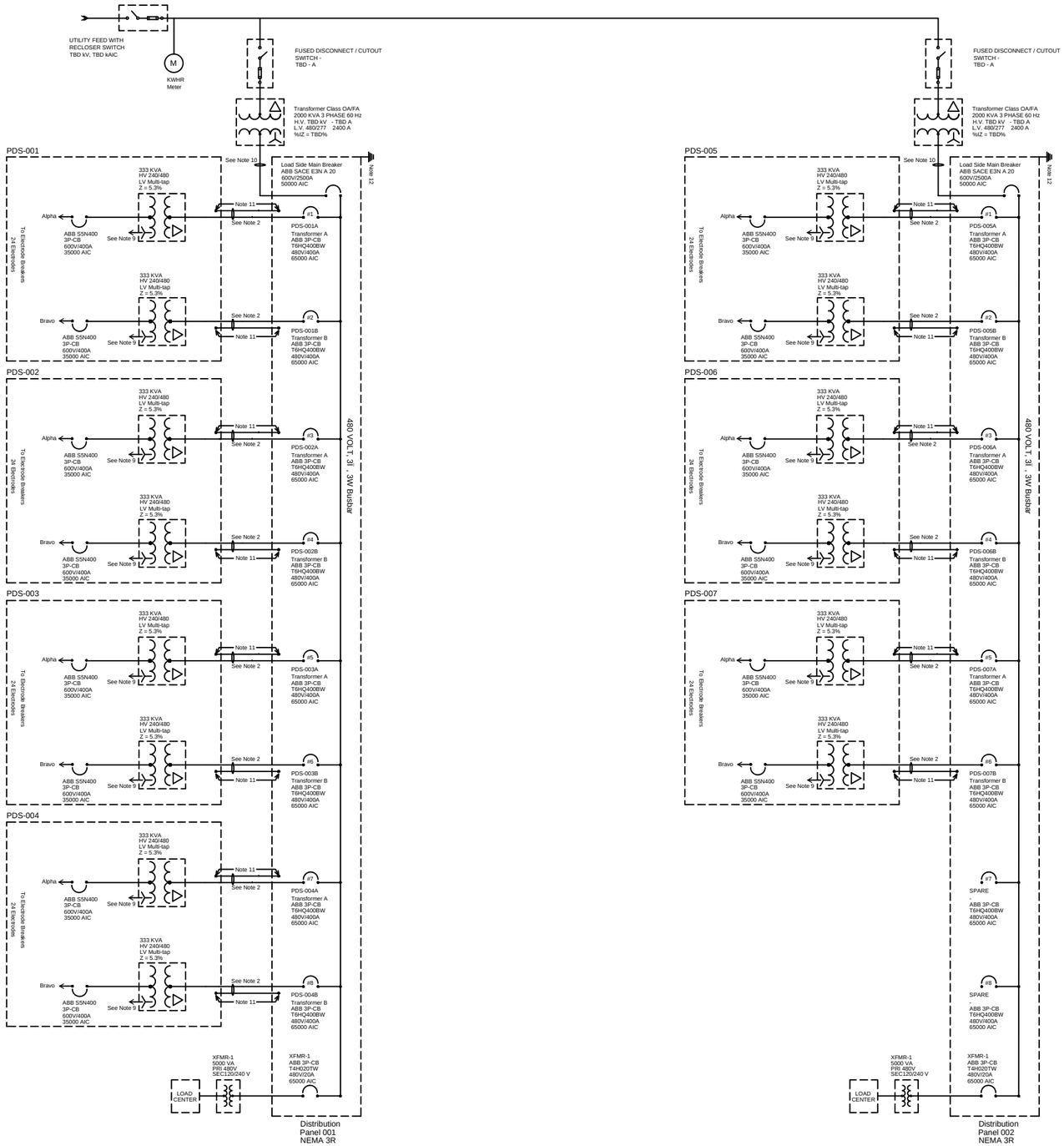

General Notes

1. Construction and material shall comply with Kentucky building code, CSA/UL, National Electrical Code and applicable local and state codes.
2. Cable from distribution breaker to PDS- XXX, will be 2 parallel 3C-250 kcmil AWG AL c/w #2 Ground to each A and B transformer: STR AL NUAL Alcan Type ACWU90 XLPE INS AIA BLK PVC JKT 600V 90C HL CSA C22.2 NO.51. Above Ground.
3. Cable from PDS-XX to E-XXX: 1C, No. 2 AWG
4. ET-DSP neutral cable: RWU-90 Copper AWG No. 2 INS 90 C PVC. Above ground.
5. Maximum operating load for a single PDS unit (24 electrodes) with a 1.5 margin factor is 24 x 10kW x 1.5 = 360kW.
6. All cable from PDS-XX to E-XXX is above ground rated.
7. All ET-DSP N-Cable is above ground rated.
8. All electrical equipment shall be grounded in accordance with NEC section 250.
9. ET-DSP neutral grounding scheme determined during system commissioning and shall include all metal-constructed extraction wells. Derived from secondary neutral of main PDS transformers and separate from utility ground.
10. Cable from substation transformer to distribution panel, Five (5) parallel 4C-750 kcmil to main distribution breaker: Copper conductor TECK cable.
11. Grounding terminals of PDS feed conductors in panels: bolted AL/ CU grounding lugs.
12. Power Distribution panel is to be grounded to the service ground.

Symbols

Amp — Load Detail
Nominal Current
Amp
Load

XXA
Circuit Breaker CB
XXXV
Variable Current
Variable Trip

Utility Switch
3 Pole
Fuseable Disconnect

U.S. DEPARTMENT OF ENERGY
DOE PORTSMOUTH/PADUCAH PROJECT OFFICE
PADUCAH GASEOUS DIFFUSION PLANT

LATA Environmental Services of Kentucky, LLC
Managed for the DEPARTMENT OF ENERGY under U.S. GOVERNMENT contract DE-AC30-10CC40020
Paducah, Kentucky

McMillan-McGee Corp
CALGARY, ALBERTA CANADA
(403) 279-7948
FAX (403) 272-7201

DOE CONTRACT NO. DE-AC30-10CC40020

PROJECT NAME:
Paducah PGDP C-400 Remediation Project

TITLE:
C-400 Complex Southeast Area
Schematic of ET-DSP Power Delivery System OPTION A Phase IIa

REV.	DATE	DESCRIPTION	DRAWN BY	DRAFT CHK	PROJ ENGR	LEAD ENGR	CONF CTRL/ NUCL SFTY	FAC MGR	E&TS MGR
B	05/01/12	Technical Edits	WR	ER	ER	BM			
A	30/05/11	PDS Feed Schematic	DP	ER	ER	BM			

DRAWING REVISIONS

LPE

DATE

PROFESSIONAL SEAL

CAD FILE NAME	BUILDING	PLANT	CLASS
Mc2-Paducah-PDS-SingleLineDiagrams.DWG	C-400	PGDP	U

SCALE:	DRAWING NUMBER	REV
To Scale	E7DC40000C012	B