Multi-Phase / Vapor Extraction WELLHEAD COMPONENTS

1. 4"Ï Steel Well Casing / Details shown in drawing #C7DC40000C006.
2. 4"Ï 150 SCRD Flange / RF A105N.
3. 4"Ï 150 S/O Flange / RF A105N.
4. 6" X 4" STD BW Conc Reducer / A234-WPB.
5. 3/4" GW Extraction Hose / Teflon.
6. 1/2" Pump Vent line / Teflon.
7. 1/4" Air Supply line / Teflon.
8. ET-DSP Neutral Wire / #2AWG Ground wire.
9. 3/8" FM Street Elbow / Brass.
10. 3/8" Close Nipple / Brass.
11. 3/8" Ball Valve (Pressure Relief Valve), with plug / Brass.
12. Temperature Gage / 0-250ÁF.
13. Vacuum Gage / 0-30Hg.
14. Strain Relief / Galvanized Steel.
15. 1/2"-13 Eye Bolt (Pump support) / Forged ASTM A489.16 ANSI B 18.15 WLL 2,600Lbs.
16. 6"Ï Well Seal / 3/16" Thickness Viton "A" FKM Sheet.
17. 2" X 4"-36 FS Thread Pipe O -Let / CL 3000 A105N.
18. 2" X Close Nipple / Galvanized Steel.
19. 2" Ball Valve / Brass.
20. 2" Insulation Nipple /Kynar 150Lb.
21. 2" Male Cam X 2" F NPT / Cam Lock Aluminum Alloy.
22. 4"Ï Steel Well Casing / Details shown in drawing #C7DC40000C006.
23. 4"Ï 150 SCRD Flange / RF A105N. or 4"Ï coupler / Galvanized steel.
24. 4"Ï 150 S/O Flange w/ Well Seal / RF A105N w/3/16" Thickness Viton "A" FKM Sheet.
25. 4"Ï Blind Flange w/ Well Seal / 150 S/O Flange / RF A105N w/ 3/16" Thickness Viton "A" FKM Sheet.
26. 2" Female Cam X 2" NPT / Cam Lock Aluminum Alloy.
27. 2" MWH Vapor Extraction Hose /Temperature (Operating Temperatures: -40ÁF to 200ÁF (-40ÁC to 93ÁC)), 150psi pressure rated, chemical, UV rated (Cover: Black Neoprene) / or equivalent chemical, temperature and pressure hose.
28. 2" X 3' MM Flow and Sample tube / STD Seamless Steel Pipe A106 GRB B.E .
29. 1/2" X3/4" Flow and Sample port / FS Threaded Pipe O -Let CL 3000 A105N.
30. 1/2" M Pipe plug / Galvanized Steel.
31. Vapor Conveyance Pipe / TBD by others.
32. 2" Air Supply Conveyance Pipe / TBD by others.
33. 1/2" X3/4" FS Threaded Pipe O -Let / CL 3000 A105N.
34. 1/2" Close Nipple / Brass.
35. 1/2" Ball Valve / Brass.
36. 1/2" X 3/8" Reducer bushing / Brass.
37. 3/8"Air filter/Moisture trap / QED 40 - 200PSI.
38. 3/8" X 1/4" Reducer bushing / Brass.
39. 1/4" Pump Cycle Counter / QED 40 - 200PSI.
40. 1/4" FM Street Elbow / Brass.
41. 1/4" NPT X 1/4" Hose barb / Brass.
42. Liquid Discharge Conveyance Pipe / TBD by others.
43. 1" FS Threaded Pipe O -Let / CL 3000 A105N.
44. 1" Close Nipple / 316 Stainless Steel.
45. 1" FF Ball Valve / Brass.
46. 1" 45ÁStreet L / 316 Stainless Steel.
47. 1"F X 1"F X 1"F X 1"F Cross / 316 Stainless Steel.
48. 3/8" FF Ball Valve / Brass.
49. 3/8" FF Spring Check Valve / Brass.
50. Electrode return line connection 3/8" Male NPT X 3/8" Barb.
51. 3/8" (Length will have to adjusted per Extraction Location) Nipple / Galvanized Steel.
52. 1" Male X 3/8" Female Reducer / Galvanized Steel.
53. 1" Spring Check Valve / Brass.
54. 3/4" Male NPT X 3/4" Barb (Pump discharge connection) / Brass.
55. 1" Male X 3/4" Female Reducer / Brass.
56. Sample Port quick connect / TBD by Others.
57. 2"Ï Fiberglass Pipe (Underground vapor extraction pipe) / Fiberglass Schedule 450.
58. 2"F X 2"F X 2"F Tee / Galvanized Steel.
59. 1/2" Slurper tube / Teflon.
60. 6" Well Head / STD Seamless Steel Pipe A106 GR B B.E.
61. 4" Well Head / STD Seamless Steel Pipe A106 GR B B.E.
62. 4" Well Head / STD Seamless Steel Pipe A106 GR B B.E.
63. 1" FF Union / 316 Stainless Steel.
64. 2" Nipple (Length will have to adjusted per Extraction Location) / STD Seamless Steel Pipe A106 GR B B.E.
65. 4"F X 4"F X 4"F Tee / Galvanized Steel.
66. 4"M X 2"F Reducer bushing / Galvanized Steel.
67. 2"M X 1/2"F Reducer bushing / Galvanized Steel.

Vapor Extraction Well Detail

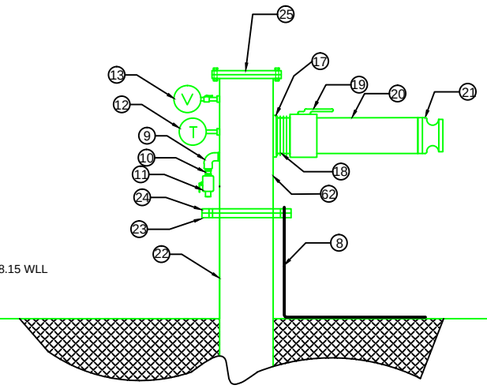

Multi-Phase Extraction Well Detail w/ ports for Extraction Pump

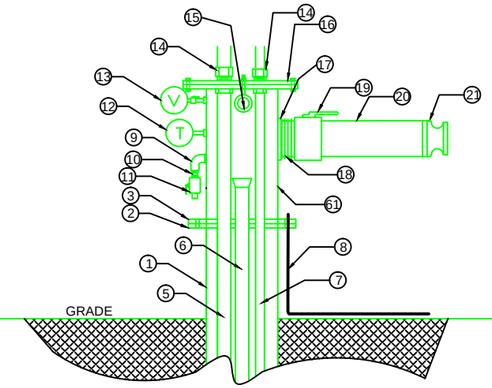

Multi-Phase Extraction Well Detail w/ ports for Extraction and Sample Pumps

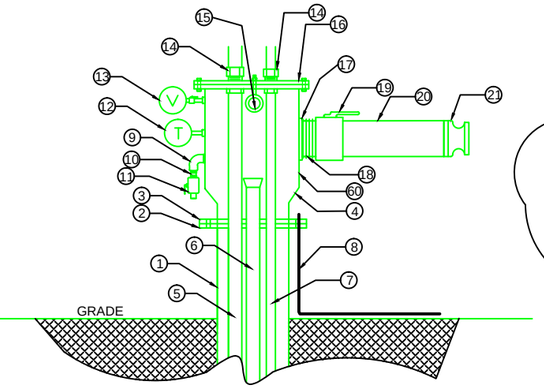

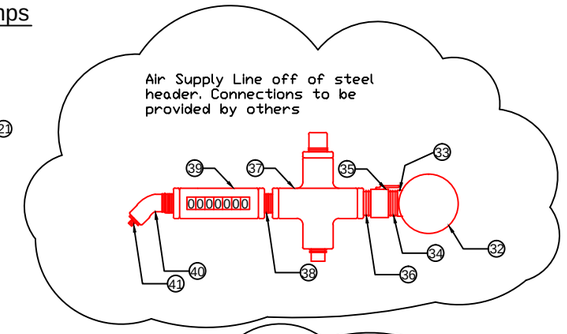

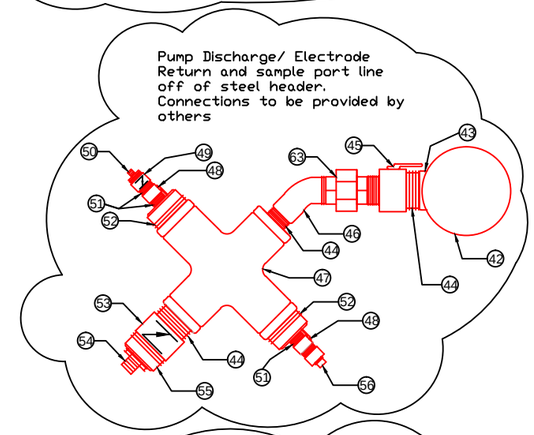

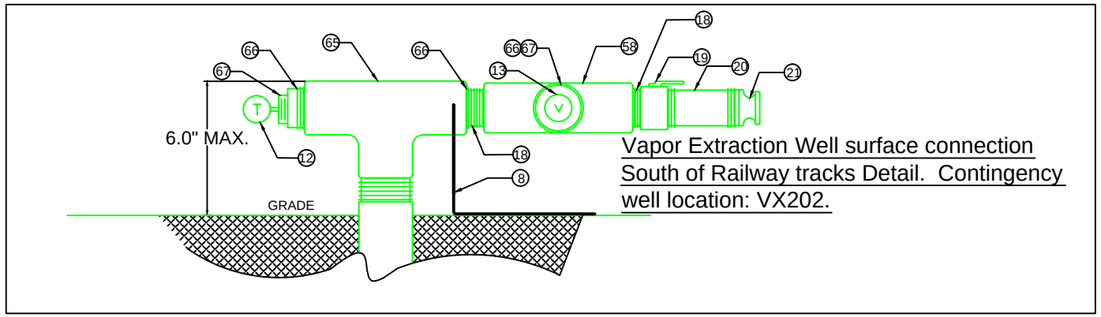

Vapor Extraction Well surface connection South of Railway tracks Detail. Contingency well location: VX202.

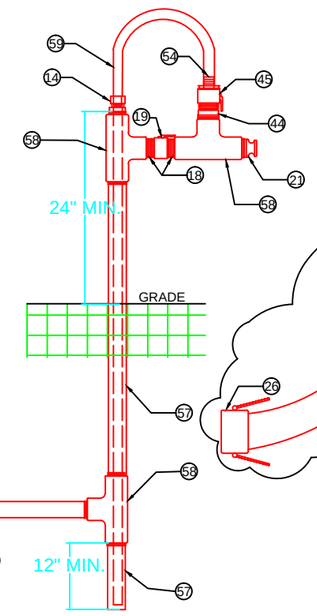

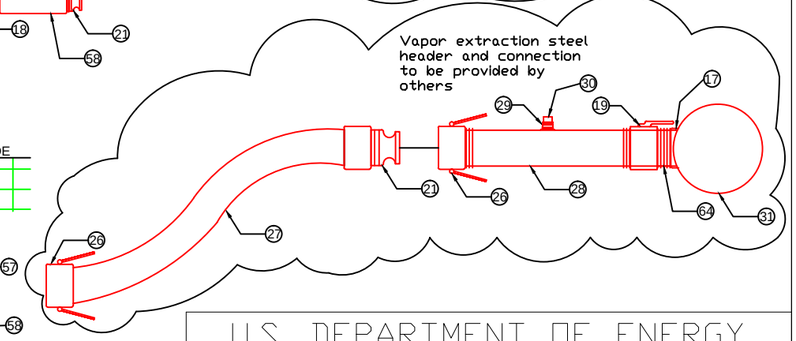

Vapor Extraction Well Detail within Vault / VX207 U-SMD Well

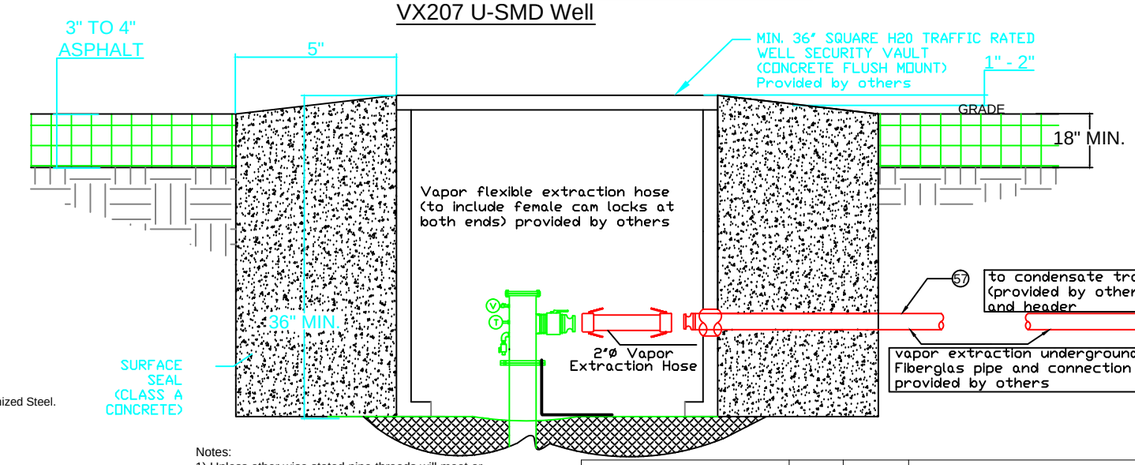

Notes:
1) Unless other wise stated pipe threads will meet or exceed ANSI B1.20.1 requirements.
2) All parts will meet or exceed a standard specification of Schedule 40.
3. Pitot tube will be installed on vapor line for flow measurement and sampling.
4. Dielectric coating will be applied, as required to reduce step and touch potentials to less than 15 volts.
5. If connected as a vapor extraction well, vapor connections same as multi-phase well.
6. Excluding conveyance piping all parts connecting the conveyance piping to the extraction well can be provided by McMillan-McGee Corp. upon request'
7. The slurper tube(59) is used to remove any condensate that will accumulate within the vapor extraction pipe(57).

Legend:
1) M - represents Male NPT
2) F - represents Female NPT.
3)FF - represents Female by Female NPT.
4)MM - represents Male by Male NPT.
5)FS - represents Female NPT by Socket.
6)TBD - To be determined.

LPE

REV.	DATE	DESCRIPTION	DRAWN BY	DRAFT CHK	DRG/	LEAD ENGR	QA	CONF CTRL/ NUCL SFTY	FAC MGR	PROJ ENGR
C	22/05/12	Rename CX wells, use 4" casing	ER	CK	ER	BM				
B	05/01/12	Technical Edits	WR	ER	WR	BM				
A	19/06/11	90% Design Drawing	WR	ER	WR	BM				

DATE

PROFESSIONAL SEAL

DRAWING REVISIONS

U.S. DEPARTMENT OF ENERGY
DOE PORTSMOUTH/PADUCAH PROJECT OFFICE
PADUCAH GASEOUS DIFFUSION PLANT

LATA Environmental Services of Kentucky, LLC
managed for the DEPARTMENT OF ENERGY under U.S. GOVERNMENT contract DE-AC30-10CC40020
Paducah, Kentucky

McMillan-McGee Corp
CALGARY, ALBERTA CANADA
(403) 279-7948
FAX (403) 272-7201

DOE CONTRACT NO. DE-AC30-10CC40020

PROJECT NAME:
Paducah PGDP C-400 Remediation Project

TITLE:
C-400 Complex
Detail Drawing of Wellheads for ET-DSP Extraction Well Locations Phase IIa

CAD FILE NAME	BUILDING	PLANT	CLASS
Mc2-Paducah-Extraction-WellheadDetails	C-400	PGDP	U

SCALE:	DRAWING NUMBER	REV
Not To Scale	C7DC40000C009	C