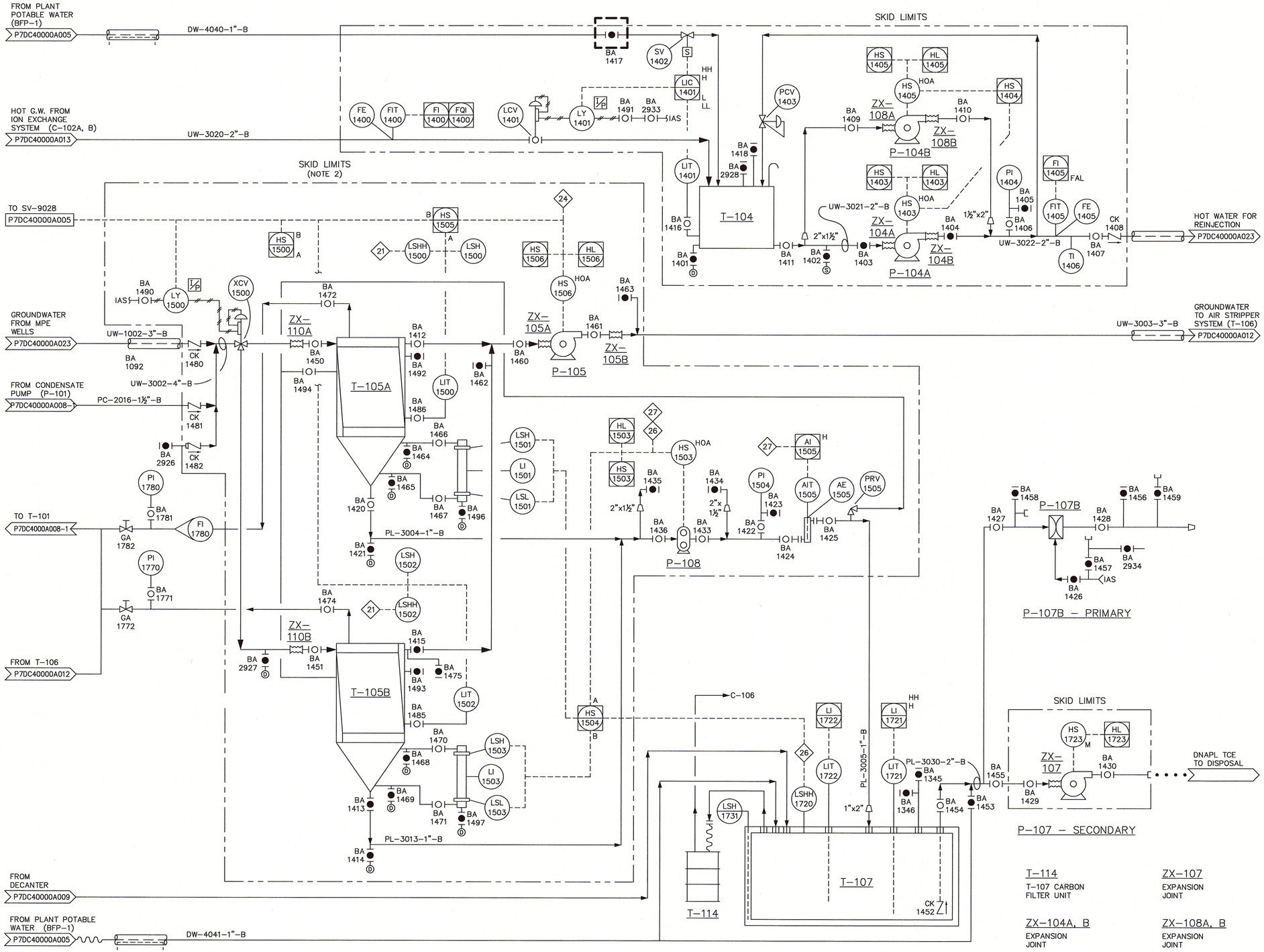


## NOTES:

1. DNAPL SEPARATOR VENDOR UNIT INCLUDES STANDBY SPARE SEPARATOR.
2. LSH-1731 ONLY MONITORS THE SECONDARY CONTAINMENT OF THE DOUBLE-WALLED TANK, T-107.

## INTERLOCKS:

21 — HIGH-HIGH LEVEL IN DNAPL SEPARATOR (T-105A, B) WILL INITIATE SHUT DOWN OF ALL WELL PUMPS AND LIQUID/VAPOR SEPARATOR PUMP (P-101), ALARM AND NOTIFY TELEMANAGER

24 — HIGH-HIGH LEVEL IN AIR STRIPPER FEED TANK (T-106) SHUTS DOWN AIR TO WELL PUMPS AND STOPS P-105

26 — HIGH-HIGH LEVEL IN LIQUID TCE STORAGE TANK (T-107) WILL SHUT OFF LIQUID TCE PUMP (P-108), ALARM AND NOTIFY TELEMANAGER

27 — HIGH CONDUCTIVITY IN DNAPL SEPARATOR (T-105) UNDERFLOW WILL SHUT OFF LIQUID TCE PUMP (P-108) AND ACTIVATE ALARM IN CENTRAL PLC

## INSTRUMENT LEGEND:

AE — INSTRUMENT MOUNTED LOCALLY OR ON SKID CONTROL PANEL

TAH — INSTRUMENT MOUNTED ON LOCAL SKID CONTROL PANEL OR SKID PLC HMI

AI — INSTRUMENT DISPLAY ON HMI OF CENTRAL PLC

LPE

| P-104A, B | P-105 | P-107 | P-107B | P-108 | T-104 | T-105A, B | T-107 | T-113 |
|---|---|---|---|---|---|---|---|---|
| HOT GROUNDWATER PUMP 5 HP | SEPARATOR WATER PUMP 5 HP | TCE TRANSFER PUMP 5 HP | PRIMARY TCE PUMP AIR DIAPHRAGM 5 HP | LIQUID TCE PUMP 1 HP | HOT GROUNDWATER TANK | DNAPL SEPARATOR | LIQUID TCE STORAGE TANK (DOUBLE-WALLED) 8'ø x 16' L | T-105 CARBON FILTER UNIT |

| T-114 | ZX-107 |
|---|---|
| T-107 CARBON FILTER UNIT | EXPANSION JOINT |
| ZX-104A, B | ZX-108A, B |
| EXPANSION JOINT | EXPANSION JOINT |
| ZX-105A, B | ZX-110A, B |
| EXPANSION JOINT | EXPANSION JOINT |

| REV. | DATE | DESCRIPTION | DRAWN BY | DRAFT CHK | PROJ ENGR | LEAD ENGR | CONF CTRL/ NUCL SFTY | FAC MGR | E&TS MGR |
|---|---|---|---|---|---|---|---|---|---|
| 8 | 6/26/13 | ISSUED FOR AS-BUILT | KLW | NJB | DSH | JTP | SJP | JRW | RAK |
| 7 | 11/19/12 | FOR AMENDMENT 1 | NJB | TJH | TJM | BCK | SJD | JRW | RES |
| 6 | 10/26/12 | PHASE 2A DESIGN-CERTIFIED FOR CONSTRUCTION | NJB | TJH | TJM | BCK | | | |

DRAWING REVISIONS

U.S. DEPARTMENT OF ENERGY
PADUCAH, PORTSMOUTH PROJECT OPERATIONS, PADUCAH GASEOUS DIFFUSION PLANT

LATA Environmental Services of Kentucky, LLC
managed for the DEPARTMENT OF ENERGY under U.S. GOVERNMENT contract DE-AC30-10CC40020
Paducah, Kentucky

DOE CONTRACT NO. DE-AC30-10CC40020

PROJECT NAME:
C-400 REMEDIATION DESIGN

TITLE:
WATER TREATMENT SYSTEMS
GROUNDWATER TREATMENT
PROCESS PIPING & INSTRUMENTATION DIAGRAM

| CAD FILE NAME | BUILDING | PLANT | CLASS |
|---|---|---|---|
| P7DC40000A011-2 rev8.dwg | C-400 | PGDP | U |

| SCALE: | DRAWING NUMBER | REV |
|---|---|---|
| NONE | P7DC40000A011-2 | 8 |