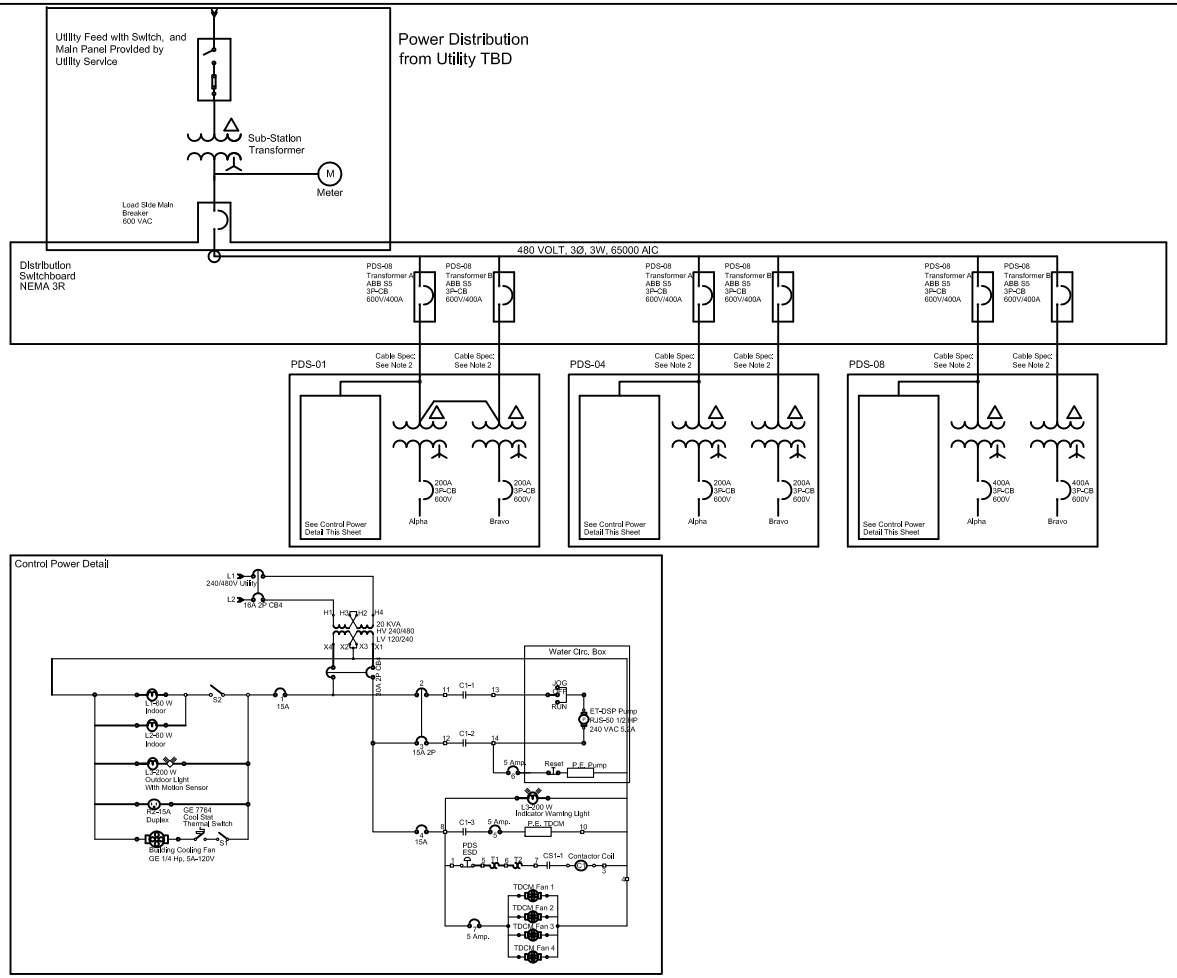

Symbols

Amp — Load Detail, Nominal Current Amp (Load)

XXA — Circuit Breaker CB
XXXV — Variable Current Variable Trip

Utility Switch 12KV 3 Pole Fuseable Disconnect

General Notes

1. Construction and material shall comply with Kentucky building code, CSA/UL, National Electrical Code and applicable local and state codes.

2. Cable from distribution breaker to PDS-XX: 250-3C STR AL NUAL ACWU90 XLPE INS AIA BLK PVC JKT 600V 90C HL CSA C22.2 NO.51. Above Ground.

3. Cable from PDS-XX to E-XXX: ROCKBESTOS 4 - 1C DAA1048B EXANE XLPO STR TNC 110C FT4 600V CSA CSA/UL MARINE GRYJKT. Above Ground.

4. Maximum connected operating load (12 electrodes) with a 1.25 margin factor for Alpha and Beta transformers is: 12X8kWX1.25=120kW at a maximum phase angle of 3 degrees = 120 kVA.

5. All electrical equipment shall be connected to utility ground in accordance with local code.

6. Cable from distribution breakers to Panel A: 2 CCT 250-3C STR AL NUAL ACWU90 XLPE INS AIA BLK PVC JKT 600V 90C HL CSA C22.2 NO.51. Above Ground.

7. Cable from distribution breakers to Panel B: 250-3C STR AL NUAL ACWU90 XLPE INS AIA BLK PVC JKT 600V 90C HL CSA C22.2 NO.51. Above Ground.

8. Cable from Substation Transformer to distribution Switchboard: 6 CCT - 500-1C Copper ran inside 5-inch Liquid Tight Flexible Conduit. Above Ground.

U.S. DEPARTMENT OF ENERGY
PADUCAH, PORTSMOUTH PROJECT OPERATIONS, PADUCAH GASEOUS DIFFUSION PLANT

PADUCAH Remediation Services
A Portage Shaw Joint Venture Company
managed for the DEPARTMENT OF ENERGY under U.S. GOVERNMENT contract DE-AC30-06EW05001
Paducah, Kentucky

McMillan-McGee Corp
CALGARY, ALBERTA CANADA
(403) 279-7948
FAX (403) 272-7201

DOE CONTRACT NO. DE-AC30-06EW05001

PROJECT NAME:
Paducah PGDP C-400 Remediation Project

TITLE:
C-400 Complex
Schematic of ET-DSP Power Delivery System

REV.	DATE (D/M/Yr)	DESCRIPTION	DRAWN BY	DRAFT CHK	DRV/ ENGR	LEAD ENGR	QA	CONF CTRL/ REQL MTTS	FAC MGR	PROJ ENGR
0	02/12/08	Issued for Construction								

DRAWING REVISIONS

LPE

DATE

PROFESSIONAL SEAL

CAD FILE NAME	BUILDING	PLANT	CLASS
Mc2 Paducah C-400 ET-DSP P2S Schematic.DWG	C-400		C

SCALE:	DRAWING NUMBER	REV
To Scale	E7DC40000A006	0