24 Electrode PDS Transformer Detail - 2 Transformers per Unit

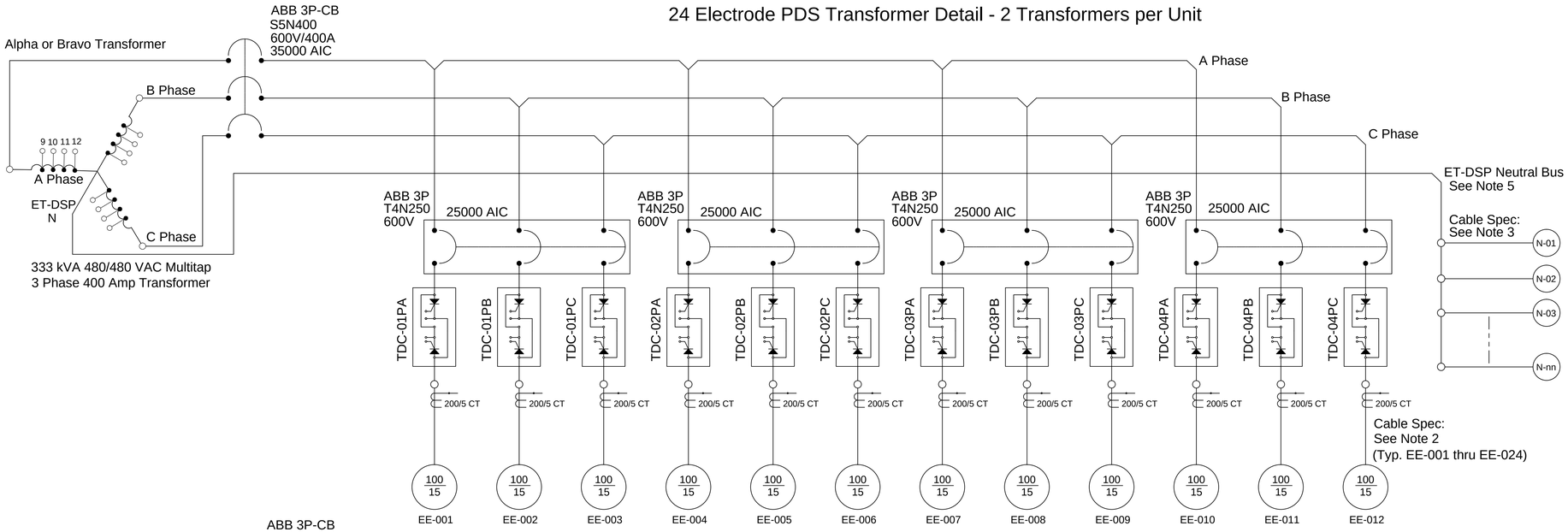

60 Electrode PDS Transformer Detail - 4 Transformers per Unit

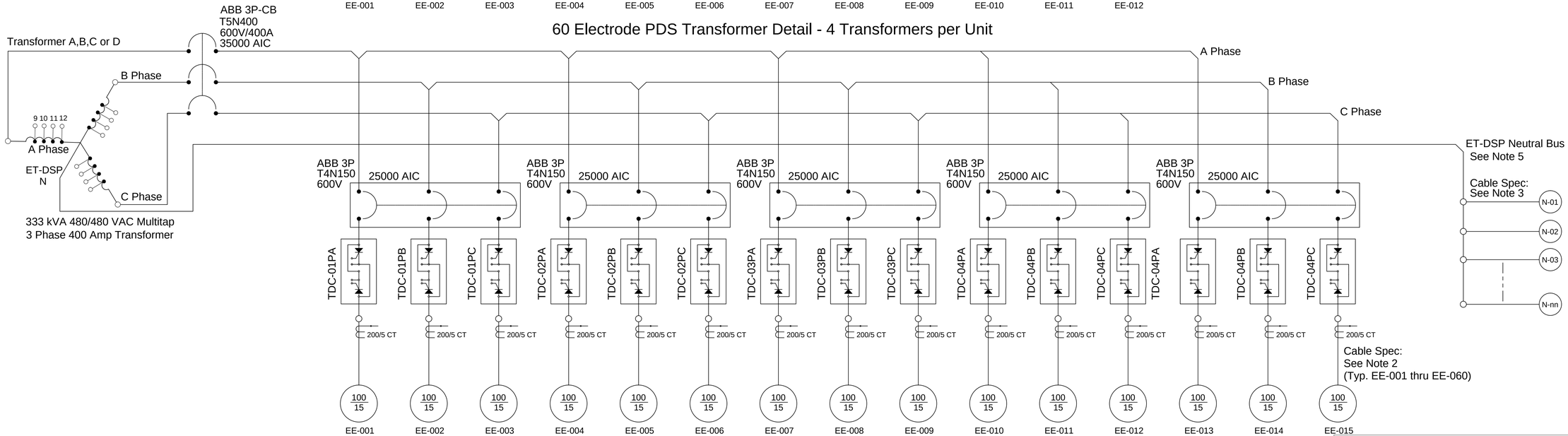

Symbols

Time Distributed Control SCR TDC-## Phase #
Output Power Panel on PDS Unit
Peak Ratings 1,200 VAC 355 Amp
Continuous Rating 165 Amp
Normally Open - Internet Controlled
Electrode Power Control Device

EE-###

Electrode No.: EE-XXX
Nominal Current/Power
Amp/kW

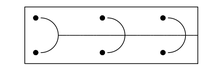

Circuit Breaker CB-XX
3P, 600 VAC

Instrument Class
Current Transformer CT
200 A/0-5V Output
Internet Monitored Real Time

General Notes

1. Construction and material shall comply with Kentucky building code, CSA/UL, National Electrical Code and applicable local and state codes.

2. Cable from PDS-XX to E-XXX: 1C No. 2 AWG, Rockbestos Type DAA1048B EXANE XLPE STR TNC 110C FT4, 600V CSA CSA/UL MARINE GRYJKT. Above ground rated.

3. ET-DSP neutral cable: RWU-90 Copper AWG No. 2 INS 90 C PVC. Above ground rated.

4. All electrical equipment shall be connected to utility ground in accordance with local code.

5. ET-DSP neutral grounding scheme determined during system commissioning and shall include all metal-constructed extraction wells.

REV.	DATE	DESCRIPTION	DRAWN BY	DRAFT CHK	PROJ ENGR	LEAD ENGR	CONF CTRL/ NUCL SFTY	FAC MGR	E&TS MGR
B	05/01/12	Technical Edits	WR	ER	ER	BM			
A	30/05/11	Initial 90% Design Schematic	WR	ER	ER	BM			

DRAWING REVISIONS

LPE

DATE

PROFESSIONAL SEAL

U.S. DEPARTMENT OF ENERGY
DOE PORTSMOUTH/PADUCAH PROJECT OFFICE
PADUCAH GASEOUS DIFFUSION PLANT

LATA Environmental Services of Kentucky, LLC
managed for the DEPARTMENT OF ENERGY under U.S. GOVERNMENT contract DE-AC30-10CC40020 Paducah, Kentucky

McMillan-McGee Corp
CALGARY, ALBERTA CANADA
(403) 279-7948
FAX (403) 272-7201

DOE CONTRACT NO. DE-AC30-10CC40020

PROJECT NAME:
Paducah PGDP C-400 Remediation Project

TITLE:
C-400 Complex East Area
Electrical Schematic of Electrode and Neutral PDS Connections Phase IIa

CAD FILE NAME	BUILDING	PLANT	CLASS
Mc2-Paducah-PDS-WellfieldSchematic.DWG	C-400	PGDP	U

SCALE:	DRAWING NUMBER	REV
Not To Scale	E7DC40000C017	B