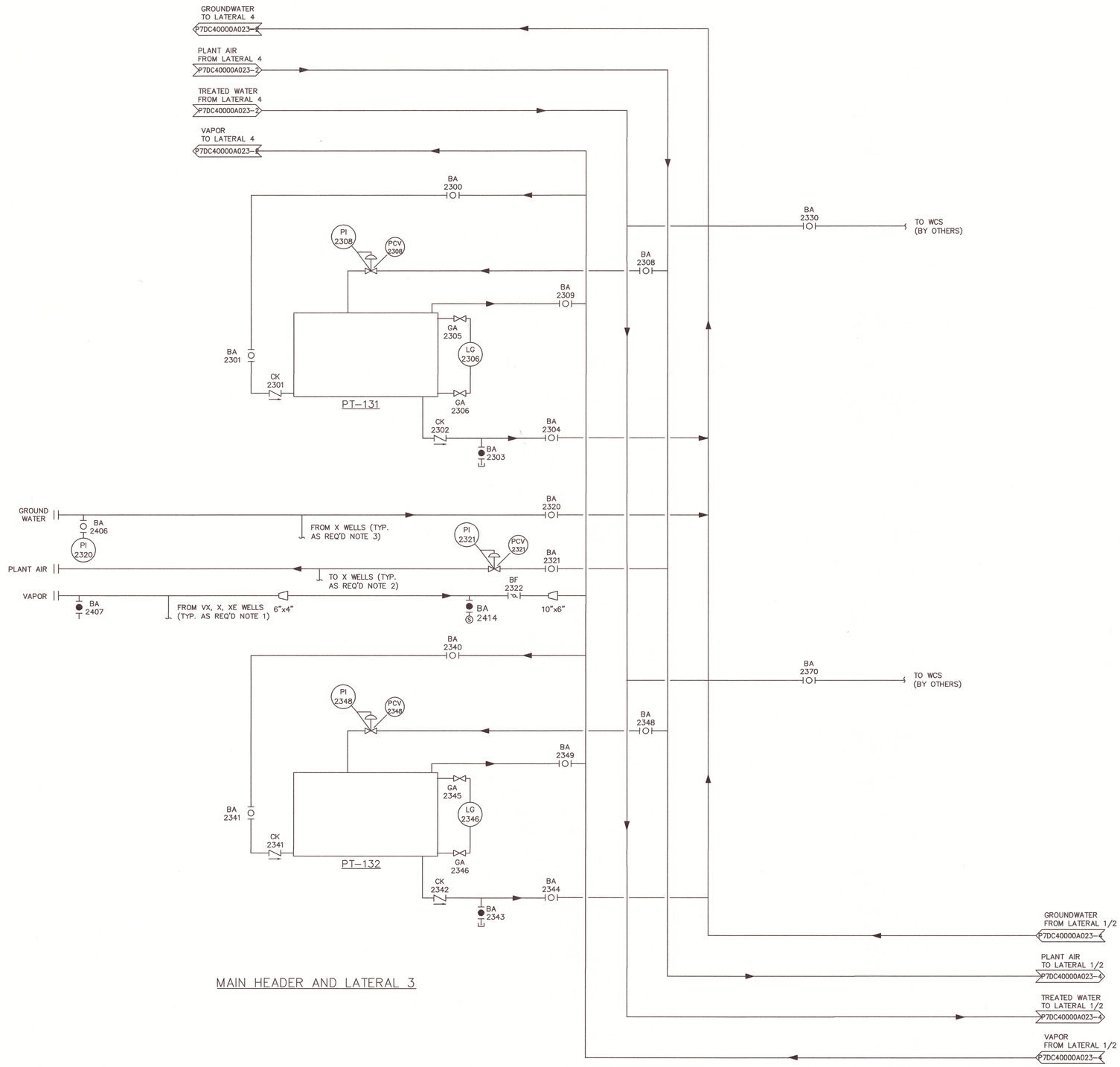

MAIN HEADER AND LATERAL 3

NOTE 1

TYPICAL VAPOR EXTRACTION FOR X, VX, XE WELLS

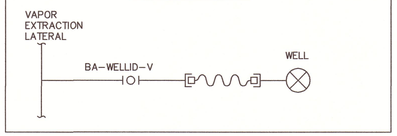

NOTE 2

TYPICAL AIR SUPPLY FOR X WELLS ONLY

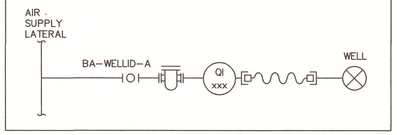

NOTE 3

TYPICAL GROUNDWATER EXTRACTION FOR X WELLS ONLY

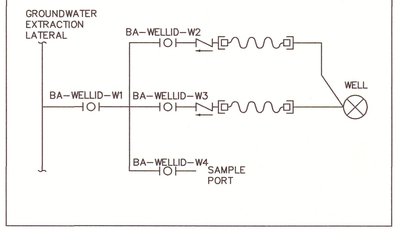

REV.	DATE	DESCRIPTION	DRAWN BY	DRAFT CHK	PROJ ENGR	LEAD ENGR	CONF CTRL/ NUCL SFTY	FAC MGR	E&TS MGR
2	5-22-14	ISSUED FOR AS-BUILT, PHASE 2A	KTW	BJW	DJH	JTP	JBJ	JRW	PAC
1	6-26-13	PHASE IIA DESIGN-ISSUED FOR AS-BUILT	KTW	NJB	DJH	JTP	SJD	JRW	PAC
0	11/19/12	FOR AMENDMENT 1	NJB	TJH	TJM	BCK	SJD	JRW	RES

DRAWING REVISIONS

U.S. DEPARTMENT OF ENERGY
PADUCAH, PORTSMOUTH PROJECT OPERATIONS,
PADUCAH GASEOUS DIFFUSION PLANT

LPE

LATA Environmental Services of Kentucky, LLC
managed for the DEPARTMENT OF ENERGY under U.S. GOVERNMENT contract DE-AC30-10CC40020
Paducah, Kentucky

DOE CONTRACT NO. DE-AC30-10CC40020

PROJECT NAME:
C-400 REMEDIATION DESIGN

TITLE:
SOIL VAPOR EXTRACTION WELLS
PROCESS PIPING & INSTRUMENTATION DIAGRAM

EDCS CAD FILENAME	BUILDING	PLANT	CLASS
P7DC40000A023-3 REV2.DWG	C-400	PDGP	U

DATE:	SCALE:	DRAWING NUMBER	REV
PROFESSIONAL SEAL	N/A	P7DC40000A023-3	2