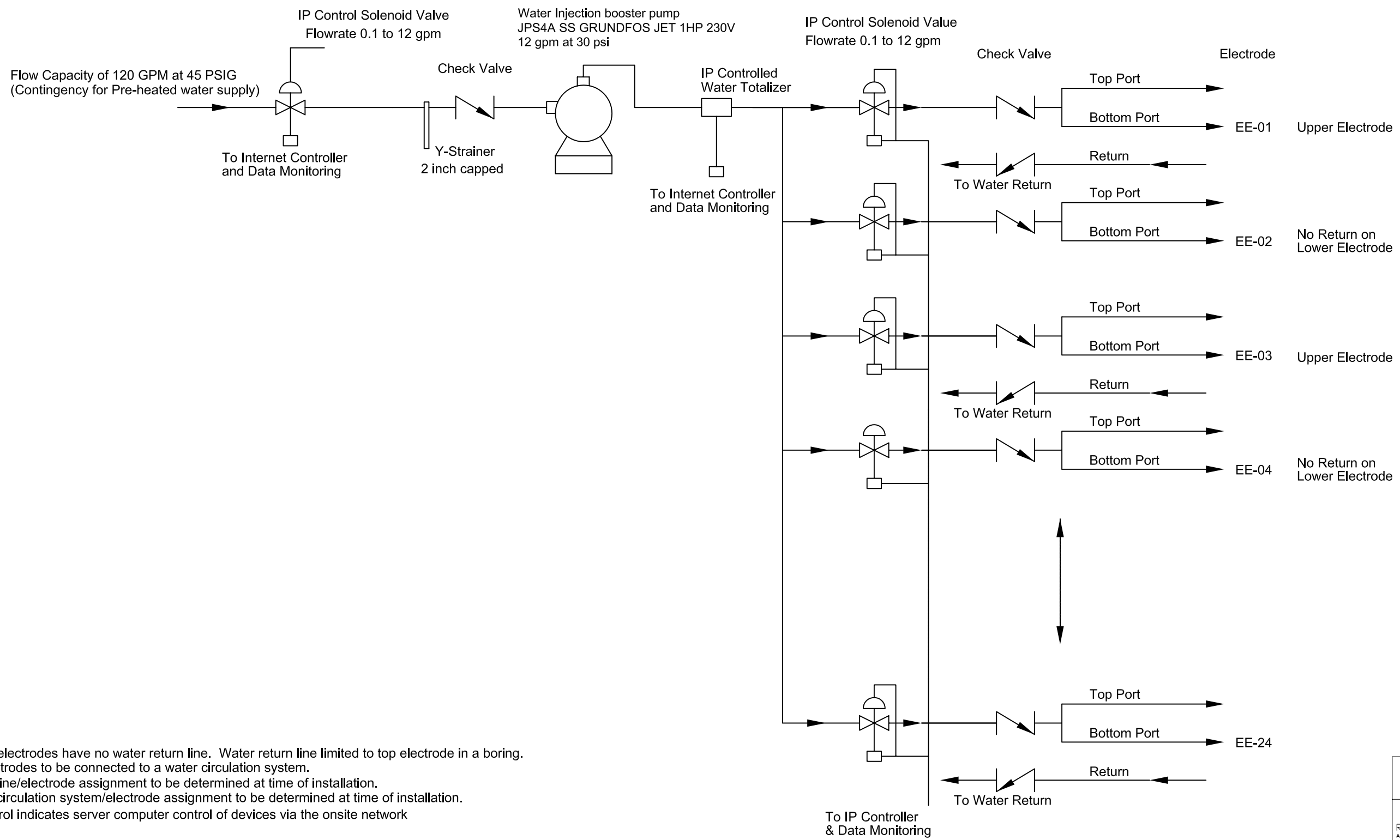

NOTES:

1) Lower electrodes have no water return line. Water return line limited to top electrode in a boring.
2) All electrodes to be connected to a water circulation system.
3) Water line/electrode assignment to be determined at time of installation.
4) Water circulation system/electrode assignment to be determined at time of installation.
5) IP control indicates server computer control of devices via the onsite network

DATE	REV.	DATE	DESCRIPTION	DRAWN BY	DRAFT CHK	DRG/ ENGR	LEAD ENGR	QA	CONF CTRL/ NUCL SFTY	FAC MGR	PROJ ENGR
LPE											
	B	12/26/07	Technical Edits	WR	RJ	RJ	BM				
	A	10/01/07	General WCS Flow Schematic	WR	ER	ER	BM				
PROFESSIONAL SEAL			DRAWING REVISIONS								

U.S. DEPARTMENT OF ENERGY
PADUCAH, PORTSMOUTH PROJECT OPERATIONS,
PADUCAH GASEOUS DIFFUSION PLANT

PADUCAH Remediation Services
A Portage Shaw Joint Venture Company

managed for the DEPARTMENT OF ENERGY under U.S. GOVERNMENT contract DE-AC30-06EW05001
Paducah, Kentucky

McMillan-McGee Corp
CALGARY, ALBERTA CANADA
(403) 279-7948
FAX (403) 272-7201

DOE CONTRACT NO. DE-AC30-06EW05001

PROJECT NAME:
Paducah PGDP C-400 Remediation Project

TITLE:
C-400 Complex
Flow Schematic of ET-DSP Water Circulation System

CAD FILE NAME	BUILDING	PLANT	CLASS
Mc2 Paducah C-400 WCS Schematic.DWG	C-400		C

SCALE:	DRAWING NUMBER	REV
To Scale	P7DC40000A007	A