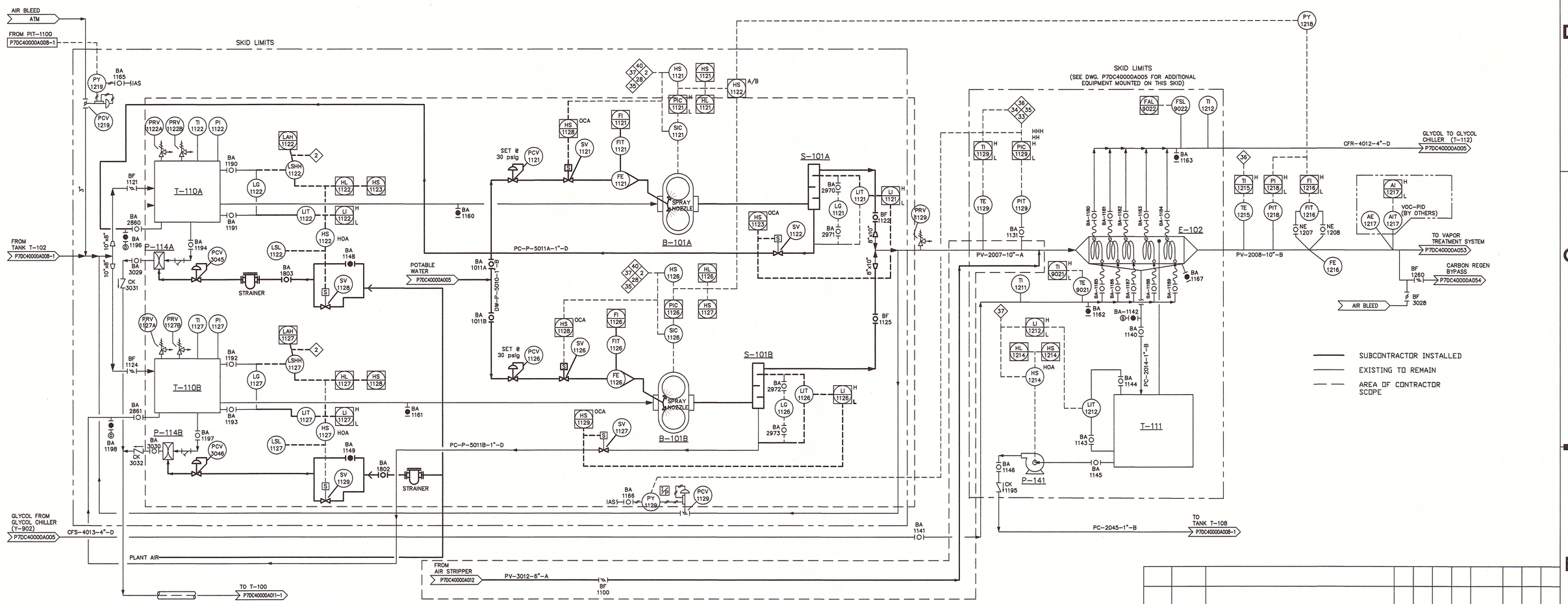

INTERLOCKS:

- (2) HIGH-HIGH LEVEL IN EITHER LIQUID/VAPOR SEPARATOR (T-101 OR T-102) WILL SHUT DOWN VACUUM BLOWERS (B-101A,B,C) AND ACTIVATE ALARM VIA CONTROL PLC
- (28) HIGH-HIGH TCE/VOC CONCENTRATION IN THE VAPOR AT THE STACK SHUTS DOWN THE VAPOR (CLOSES SV-9028) AND GROUNDWATER SYSTEMS (STOPS VACUUM BLOWERS B-101A,B,C)
- (33) HIGH-HIGH INLET PRESSURE AT E-102 OPENS BLOWER RECYCLE VALVE PCV-1129.
- (34) HIGH-HIGH PRESSURE SHUTS DOWN VACUUM BLOWERS
- (35) VACUUM BLOWERS WILL BE SHUT DOWN IF DIFFERENTAL PRESSURE (PIT-1129 & PIT-1204) EXCEEDS 10 PSIG
- (36) HIGH-HIGH TEMPERATURE AT E-102 OUTLET SHUTS DOWN THE VACUUM BLOWERS (B-101A,B,C)
- (37) HIGH-HIGH LEVEL IN T-108 SHUTS DOWN P-111, P-112, P-113, P-141 AND VACUUM BLOWERS B-101A,B,C
- (40) IF B-101A,B,C ARE OFF OR IF FIT 224 IS LESS THAN OR EQUAL TO 100 CFM FOR 30 SECONDS P-106 AND P-103A BOTH SHUT DOWN.

INSTRUMENT LEGEND:

- (AE) INSTRUMENT MOUNTED LOCALLY OR ON SKID CONTROL PANEL
- (TAH) INSTRUMENT MOUNTED ON LOCAL SKID CONTROL PANEL OR SKID PLC HMI
- (AI) INSTRUMENT DISPLAY ON HMI OF CENTRAL PLC

B-101A	B-101B	E-102	S-101A, B	P-114A, B	P-141	T-110A, B	T-111
VACUUM BLOWER 100 HP	VACUUM BLOWER 100 HP	VAPOR CHILLER	VACUUM BLOWER SILENCER/ SEPARATOR	T-110A, B CONDENSATE PUMP	E-102 CONDENSATE PUMP ¾ HP	B-101A, B LIQUID/VAPOR SEPARATOR	E-102 CONDENSATE TANK

REV.	DATE	DESCRIPTION	DRAWN BY	DRAFT CHK	PROJ ENGR	LEAD ENGR	CONF CTRL/ NUCL SFTY	FAC MGR	E&TS MGR
10	5-23-14	ISUED FOR AS-BUILT, PHASE 2A	KTV	NJB	DJH	JTP	SJD	JRW	PAC
9	6-26-13	PHASE IIA DESIGN-ISSUED FOR AS-BUILT	KTV	NJB	DJH	JTP	SJD	JRW	PAC
8	11/19/12	FOR AMENDMENT 1	NJB	TJH	TJM	BCK	SJD	JRW	RES
7	10/26/12	PHASE IIA DESIGN-CERTIFIED FOR CONSTRUCTION	NJB	TJH	TJM	BCK	SJD	JRW	RES

DRAWING REVISIONS

U.S. DEPARTMENT OF ENERGY
PADUCAH, PORTSMOUTH PROJECT OPERATIONS,
PADUCAH GASEOUS DIFFUSION PLANT

LPE

LATA Environmental Services of Kentucky, LLC managed for the DEPARTMENT OF ENERGY under U.S. GOVERNMENT contract DE-AC30-10CC40020 Paducah, Kentucky

DOE CONTRACT NO. DE-AC30-10CC40020

PROJECT NAME:
C-400 REMEDIATION DESIGN

TITLE:
SOIL VACUUM EXTRACTION AND VAPOR CONDITIONING PROCESS PIPING & INSTRUMENTATION DIAGRAM

EDCS CAD FILENAME	BUILDING	PLANT	CLASS
P7DC40000A008-2 REV10.DWG	C-400	PDGP	U

DATE:	SCALE:	DRAWING NUMBER	REV
PROFESSIONAL SEAL	N/A	P7DC40000A008-2	10

302