CP4-SM-2103 **FRev. 1**	**TITLE**: Inspection, Testing, Repair and Replacement of Backflow Prevention Devices	Page 1 of 24

DOCUMENT CATEGORY: ☐ Administrative ☒ Technical

LEVEL OF USE: ☐ Information Level ☒ Reference Level ☐ Continuous Use

FUNCTIONAL AREA: Stabilization & Deactivation **SUBJECT MATTER AREA:** Surveillance & Maintenance	**SUBJECT MATTER EXPERT**: Eric Hofer, Project Construction Manager
NUCLEAR SAFETY REVIEW DOCUMENTATION: N/A per CP3-NS-2001, Step 6.1.3	**APPROVED BY/DATE** (Signature on file): Ken Stewart, Surveillance & Maintenance Manager 12/14/2017
REQUIRED REVIEW DATE (or expiration date for temporary change): 12/14/2020	**EFFECTIVE DATE**: 12/20/2017

REVISION/CHANGE LOG

Revision/Change Letter	Description of Changes	Pages Affected	Date of Revision/Change
FR0	Procedure Bluesheeted	All	09/20/2017
FR1	Non-intent revision to remove from Bluesheet	All	12/14/2017

TABLE OF CONTENTS

1.0 PURPOSE AND SCOPE 3
1.1 Purpose 3
1.2 Scope 3
2.0 REFERENCES 3
2.1 Use References 3
2.2 Source References 3
3.0 COMMITMENTS 3
4.0 PRECAUTIONS AND LIMITATIONS 4
4.1 Precautions 4
4.2 Limitations 4
5.0 PREREQUISITES 4
6.0 INSTRUCTIONS 5
6.1 Reduced Pressure Principal Assembly Test Initial Setup 5
6.2 Evaluate the Opening Point of the Relief Valve on Reduced Pressure Principal Assembly 7
6.3 Test Reduced Pressure Principal Assembly #2 Check for Leakage Against Backpressure 8
6.4 Evaluate the Drop Across Reduced Pressure Principal Assembly #1 Check in Direction of Flow 9
6.5 Test the Reduced Pressure Principal Assembly #2 Shutoff Valve for Leakage 9
6.6 Evaluate the Drop Across Reduced Pressure Principal Assembly #2 Check in Direction of Flow 10
6.7 Double Check Valve Assembly Test Initial Setup 11
6.8 Evaluate the Drop Across Double Check Valve Assembly #1 Check in Direction of Flow 12
6.9 Test Double Check Valve Assembly #2 Check for Leakage Against Backpressure 13
6.10 Test the Double Check Valve Assembly #2 Shutoff Valve for Leakage 14
6.11 Evaluate the Drop Across Double Check Valve Assembly #2 Check in Direction of Flow 14
6.12 Replacement of Backflow Prevention Devices 15
7.0 ACCEPTANCE CRITERIA 15
8.0 POST PERFORMANCE WORK ACTIVITIES 16
9.0 RECORDS 16
9.1 Records Generated 16
9.2 Records Disposition 16
APPENDIX A – ACRONYMS/DEFINITIONS 17
APPENDIX B – WATTS TK-99E 18
APPENDIX C – REDUCED PRESSURE PRINCIPAL BACKFLOW PREVENTION DEVICE 19
APPENDIX D – DOUBLE CHECK VALVE BACKFLOW PREVENTION DEVICE 20
APPENDIX E – TROUBLESHOOTING GUIDE 21
CP4-SM-2103-F01 – REDUCED PRESSURE PRINCIPAL ASSEMBLY BACKFLOW PREVENTION DEVICE REPORT 23
CP4-SM-2103-F02 – DOUBLE CHECK VALVE ASSEMBLY BACKFLOW PREVENTION DEVICE REPORT 24

1.0 PURPOSE AND SCOPE

1.1 Purpose

The purpose of this procedure is to provide instructions for inspection, testing, repair and replacement of reduced pressure zone principal and double check valve backflow prevention devices (BPDs) for use in potable water systems and sanitary fire water systems at the Paducah Gaseous Diffusion Plant (PGDP) Deactivation & Remediation (D&R) contractor site.

1.2 Scope

This procedure applies to PGDP D&R contractor personnel involved in the inspection, testing and repair of reduced pressure zone principal and double check valve BPDs.

Sections and steps of this procedure may be performed in order necessary, as directed by the Supervisor and/or the applicable Activity Level Work Control Document, to accomplish the assigned task.

2.0 REFERENCES

2.1 Use References

None

2.2 Source References

- American Society of Sanitary Engineers (ASSE), *Standard No. 1013, 1988*
- ASSE, *Standard No. 1015, 1988*
- American Water Works Association M14, *Backflow Prevention Manual, Latest Edition*
- CP2-SM-0020, *Administrative Controls for Powered Industrial Trucks*
- CP3-HS-2010, *Instructions for Lockout Tagout*
- CP3-HS-2012, *Construction and Work Zone Barricades and Signs*
- CP3-SM-0001, *Control of Sanitary Water System Piping Connections*
- CP3-WM-1037, *Generation and Temporary Storage of Waste Materials*
- Engineering Standard *ES-4.18-2, Latest Revision*
- JHA-15506, *Inspection, Testing and Repair of Backflow Preventers*
- *Manual of Cross-Connection Control by Foundation for Cross-Connection Control and Hydraulic Research, University of Southern California, Ninth Edition*

3.0 COMMITMENTS

None

4.0 PRECAUTIONS AND LIMITATIONS

4.1 Precautions

4.1.1 The frequency for inspecting BPDs shall be tracked by the Preventive Maintenance (PM) database.

4.1.2 **When** performing work on a BPD that supports a sprinkler system, **then** Fire Services shall be notified before work begins and after work has been completed.

4.1.3 Waste generated shall be disposed of according to CP3-WM-1037, *Generation and Temporary Storage of Waste Materials.*

4.1.4 Barricades and signs shall be placed to demarcate work areas according to CP3-HS-2012, *Construction and Work Zone Barricades and Signs*, as required.

4.1.5 **If** required by the work to be performed, **then** equipment shall be placed on Lockout/Tagout (LOTO) according to CP3-HS-2010, *Instructions for Lockout Tagout*.

4.1.6 **If** the work to be performed requires the use of a forklift, **then** the forklift shall be operated according to CP2-SM-0020, *Administrative Controls for Powered Industrial Trucks.*

4.1.7 **If** manual lifting is required**, then** the following guidelines shall be followed:

A. Mechanical assistance or additional personnel shall be utilized for lifting items over **50 lbs.** or **1/3** of lifter's body weight.

B. Lifter(s) shall lift with their legs, **NOT** with their back.

C. Lifter(s) shall avoid twisting their body when handling material.

4.2 Limitations

A Waste Engineer shall be present during all waste packaging activities, as required by Waste Generator.

5.0 PREREQUISITES

5.1 Ensure test equipment is within calibration date.

5.2 Ensure personnel performing test are current on training for testing of BPDs.

5.3 **If** work is to be performed in a posted radiological area or above **6 feet**, **then** contact a Radiological Control Technician for guidance.

5.4 **If** work is to be performed on a BPD that supports a sprinkler system, **then** notify Fire Services prior to starting work.

5.5 The following test equipment, tools and supplies are recommended for use in Sections **6.1** through **6.12:**

- Measuring and Test Equipment (M&TE) – Backflow prevention device test equipment
- Round brass tags
- Inspection sticker

6.0 INSTRUCTIONS

Maintenance Mechanic

6.1 Reduced Pressure Principal Assembly Test Initial Setup

6.1.1 Complete top section of CP4-SM-2103-F01, *Reduced Pressure Principal Assembly Backflow Prevention Device Report*.

6.1.2 Ensure test equipment is within calibration date and in good working order.

6.1.3 Inspect device to be tested to ensure RELIEF VALVE drain is **NOT** leaking.

6.1.4 **If** RELIEF VALVE drain is leaking, **then** troubleshoot **and** repair according to Appendix E, *Troubleshooting Guide.*

6.1.5 **If** BPD Assembly **CANNOT** be repaired, **then** perform the following:

A. Check "FAILED" on CP4-SM-2103-F01.

B. Record reason for failure in **Comments Section** of CP4-SM-2103-F01.

C. Proceed to Section **8.0**.

6.1.6 Flush test cocks by performing the following:

A. Open TEST COCK #4 to establish flow through the unit.

B. Leave TEST COCK #4 open **until** TEST COCKS #1, #2 and #3 are flushed.

C. Flush TEST COCK #1.

D. Flush TEST COCK #2.

E. Flush TEST COCK #3.

F. Close TEST COCK #4.

6.1.7 **If NOT** already in place, **then** install test kit adapters into the test cocks.

6.1.8 Before connecting the test kit, ensure all TEST KIT VALVES are in the CLOSED position.

6.1.9 Connect HIGH SIDE HOSE of the test kit to TEST COCK #2.

6.1.10 Connect LOW SIDE HOSE of the test kit to TEST COCK #3.

6.1.11 Open TEST COCK #3.

6.1.12 Open LOW SIDE BLEED VALVE to purge air from the test kit.

> CAUTION:
>
> **If** test cock in Step **6.1.13** is opened too quickly, **then** it may cause the RELIEF VALVE to open. To achieve accurate test measurements, it is important **NOT** to open the RELIEF VALVE **until** the appropriate time.

6.1.13 **Slowly** open TEST COCK #2.

6.1.14 Open HIGH SIDE BLEED VALVE to purge air from the test kit.

6.1.15 Close HIGH SIDE BLEED VALVE.

6.1.16 After gauge reaches upper end of scale, close LOW SIDE BLEED VALVE.

6.1.17 Close SHUTOFF VALVE #2.

6.1.18 **If** RELIEF VALVE begins to discharge when closing SHUTOFF VALVE, **then** troubleshoot **and** repair according to Appendix E.

6.1.19 **If** BPD Assembly **CANNOT** be repaired, **then** perform the following:

A. Check "FAILED" on CP4-SM-2103-F01.

B. Record reason for failure in **Comments Section** of CP4-SM-2103-F01.

C. Proceed to Section **8.0**.

6.1.20 Observe gauge reading **and** perform **one** of the following, as appropriate:

> CAUTION:
>
> The reading on the test kit reflects the **apparent** static drop across CHECK VALVE #1 (setup pressure). This number **CANNOT** be correctly determined **until** other unit functions have been evaluated; and the number should **NOT** be recorded at this time.

A. **If** gauge stabilizes at point above the RELIEF VALVE opening point, **then** proceed to Section **6.2**.

B. **If** pressure drops to RELIEF VALVE opening point, **then** troubleshoot **and** repair according to Appendix E.

6.1.21 **If** BPD Assembly **CANNOT** be repaired, **then** perform the following:

A. Check "FAILED" on CP4-SM-2103-F01.

B. Record reason for failure in **Comments Section** of CP4-SM-2103-F01.

C. Proceed to Section **8.0**.

6.2 Evaluate the Opening Point of the Relief Valve on Reduced Pressure Principal Assembly

NOTE:

The following series of steps determine whether the RELIEF VALVE is opening when pressure in the zone is less than (<) **2 psi** of supply pressure, and holding tight in other conditions.

6.2.1 Open HIGH SIDE NEEDLE VALVE **one** turn.

CAUTION:

The LOW SIDE VALVE should **NOT** require opening more than (>) **1/4** turn to exercise RELIEF VALVE. **If** LOW SIDE VALVE does require opening more than (>) **1/4** turn, **then** it is possible that SHUTOFF VALVE #2 is leaking. **If** RELIEF VALVE does **NOT** open, **then** the valve may be stuck or the pressure passage may be clogged.

6.2.2 **Slowly** open LOW SIDE NEEDLE VALVE.

6.2.3 As gauge drops, observe RELIEF VALVE discharge opening.

A. **When** water begins to drip from the discharge opening, **then** note reading indicated on the gauge.

B. Use this reading as the RELIEF VALVE opening point.

6.2.4 Close LOW SIDE NEEDLE VALVE.

6.2.5 Perform **one** of the following actions, as required:

A. **If** RELIEF VALVE opened **before** gauge dropped to **2 psi**, **then** record opening point on CP4-SM-2103-F01 **and** proceed to Section **6.3**.

B. **If** RELIEF VALVE opened at a pressure less than (<) **2 psi or** did **NOT** open, **then** perform the following:

1. Contact Supervisor for additional isolation assistance.

2. **If** flow can be stopped by shutoff of another valve downstream, **then** shut off valve **and** retest.

3. **If** flow **CANNOT** be stopped by shutting off another valve downstream**, then** troubleshoot **and** repair according to Appendix E**.**

6.2.6 **If** BPD Assembly **CANNOT** be repaired, **then** perform the following:

A. Check “FAILED” on CP4-SM-2103-F01.

B. Record reason for failure in **Comments Section** of CP4-SM-2103-F01.

C. Proceed to Section **8.0**.

6.3 Test Reduced Pressure Principal Assembly #2 Check for Leakage Against Backpressure

NOTE:

The following series of action steps determine that CHECK VALVE #2 is holding tight in backpressure conditions.

6.3.1 Connect bypass hose to TEST COCK #4.

6.3.2 Open TEST COCK #4.

6.3.3 Open LOW SIDE BLEED VALVE to reestablish setup pressure in zone between the two checks.

6.3.4 Close LOW SIDE BLEED VALVE.

NOTE:

Step **6.3.5** will allow pressure to be routed to the zone between CHECK VALVE #2 and SHUTOFF VALVE #2.

6.3.5 Open BYPASS NEEDLE VALVE.

6.3.6 Observe gauge reading for the following:

- No movement in the gauge indicates CHECK VALVE #2 is holding tight against backpressure.
- A slight drop in gauge pressure, then stability above the RELIEF VALVE opening point, indicates there is CHECK VALVE #2 disc compression but the check valve is holding tight.
- A drop in gauge pressure to RELIEF VALVE opening point, indicating CHECK VALVE #2 is leaking.

6.3.7 **If** a drop in gauge pressure is observed, **then** reestablish setup pressure **and** evaluate again.

6.3.8 Perform **one** the following actions, as required:

A. **If** CHECK VALVE #2 is holding tight, **then** check “Holding Tight” on CP4-SM-2103-F01 **and** proceed to Section **6.4**.

B. **If** CHECK VALVE #2 is **NOT** holding tight, **then** troubleshoot **and** repair according to Appendix E.

6.3.9 **If** CHECK VALVE #2 **CANNOT** be repaired, **then** perform the following:

A. Check “FAILED” on CP4-SM-2103-F01.

B. Record reason for failure in **Comments Section** of CP4-SM-2103-F01.

C. Proceed to Section **8.0**.

6.4 Evaluate the Drop Across Reduced Pressure Principal Assembly #1 Check in Direction of Flow

NOTE:

A reading less than (<) **3.0 psi** does **NOT** mean that the unit is inadequate protection against backflow, but does indicate "spitting" may occur from the RELIEF VALVE during line pressure fluctuations.

6.4.1 Perform the following to determine whether static pressure drop across CHECK VALVE #1 is **3.0 psi** greater than opening of RELIEF VALVE:

A. Open LOW SIDE BLEED VALVE to reestablish setup pressure in the zone between the checks.

B. Close LOW SIDE BLEED VALVE.

6.4.2 Observe gauge reading **and** perform **one** of the following actions, as appropriate:

NOTE:

A stable gauge pressure reading of **3.0 psi** above RELIEF VALVE opening point indicates CHECK VALVE #1 is holding tight with adequate pressure differential to minimize spitting.

A. **If** gauge pressure reading is **3.0 psi** above RELIEF VALVE opening point, **then** record result on CP4-SM-2103-F01 **and** proceed to Section **6.5**.

B. **If** gauge pressure drops to RELIEF VALVE opening point, **then** troubleshoot **and** repair according to Appendix E.

6.4.3 **If** CHECK VALVE #1 **CANNOT** be repaired, **then** perform the following:

A. Check "FAILED" on CP4-SM-2103-F01.

B. Record reason for failure in **Comments Section** of CP4-SM-2103-F01.

C. Proceed to Section **8.0**.

6.5 Test the Reduced Pressure Principal Assembly #2 Shutoff Valve for Leakage

6.5.1 Close TEST COCK #2 to ensure SHUTOFF VALVE #2 is holding tight **and** perform **one** of the following actions, as appropriate:

NOTE:

No movement in the gauge pressure indicates SHUTOFF VALVE #2 is holding tight.

A drop in gauge pressure indicates SHUTOFF VALVE #2 is leaking.

A. **If** there is no movement in the gauge pressure, **then** check "HOLDING TIGHT" on CP4-SM-2103-F01.

B. **If** there is a drop in gauge pressure, **then** perform the following:

1. Contact Supervisor for additional isolation assistance.

2. **If** flow can be stopped by shutoff of another valve downstream, **then** shut off valve **and** retest.

3. **If** flow **CANNOT** be stopped by shutting off another valve downstream**, then** troubleshoot **and** repair SHUTOFF VALVE #2 according to Appendix E.

6.5.2 **If** SHUTOFF VALVE #2 **CANNOT** be repaired, **then** perform the following:

A. Check "FAILED" on CP4-SM-2103-F01.

B. Record reason for failure in **Comments Section** of CP4-SM-2103-F01.

C. Proceed to Section **8.0**.

6.5.3 Perform the following:

A. Close all test cocks.

B. Disconnect all hoses.

C. Close HIGH SIDE NEEDLE VALVE and BYPASS NEEDLE VALVE.

6.6 Evaluate the Drop Across Reduced Pressure Principal Assembly #2 Check in Direction of Flow

6.6.1 Determine whether pressure drop across CHECK VALVE #2 is greater than (>) **1 psi** by performing the following:

A. Connect HIGH SIDE HOSE of the test kit to TEST COCK #3.

B. Connect LOW SIDE HOSE of the test kit to TEST COCK #4.

C. Open TEST COCK #4.

D. Open TEST COCK #3.

E. Open LOW SIDE BLEED VALVE to purge air from the test kit.

F. Open HIGH SIDE BLEED VALVE to purge air from the test kit.

G. Close HIGH SIDE BLEED VALVE.

H. Close LOW SIDE BLEED VALVE.

6.6.2 Observe gauge **and** perform **one** of the following actions, as appropriate:

NOTE:
A stable pressure reading of **1 psi or above** indicates CHECK VALVE #2 is holding tight with adequate differential pressure.
A pressure reading **below 1 psi** indicates repairs are required to CHECK VALVE #2.

A. **If** there is a stable pressure reading of **1 psi or above**, **then** check "HOLDING TIGHT" on CP4-SM-2103-F01.

B. **If** pressure drops **below 1 psi**, **then** troubleshoot **and** repair CHECK VALVE #2 according to Appendix E.

6.6.3 **If** CHECK VALVE #2 **CANNOT** be repaired, **then** perform the following:

A. Check "FAILED" on CP4-SM-2103-F01.

B. Record reason for failure in **Comments Section** of CP4-SM-2103-F01.

C. Proceed to Section **8.0**.

6.6.4 Perform the following:

A. Close all test cocks.

B. Disconnect all hoses.

C. Remove fittings and drain test kit.

D. Open SHUTOFF VALVE #2.

6.6.5 Proceed to Section **8.0**.

6.7 Double Check Valve Assembly Test Initial Setup

6.7.1 Complete top section of CP4-SM-2103-F02, *Double Check Valve Assembly Backflow Prevention Device Report*.

6.7.2 Ensure test equipment is within calibration date and in good working order.

6.7.3 Flush test cocks by performing the following:

A. Open TEST COCK #4 to establish flow through the unit.

B. Leave TEST COCK #4 open **until** TEST COCKS #1, #2 and #3 are flushed.

C. Flush TEST COCK #1.

D. Flush TEST COCK #2.

E. Flush TEST COCK #3.

F. Close TEST COCK #4.

6.7.4 **If NOT** already in place, **then** install test kit adapters into the test cocks.

6.7.5 Before connecting the test kit, ensure all TEST KIT VALVES are in the CLOSED position.

6.7.6 Connect HIGH SIDE HOSE of the test kit to TEST COCK #2.

6.7.7 Connect LOW SIDE HOSE of the test kit to TEST COCK #3.

6.7.8 Open TEST COCK #3.

6.7.9 Open LOW SIDE BLEED VALVE to purge air from the test kit.

6.7.10 **Slowly** open TEST COCK #2.

6.7.11 Open HIGH SIDE BLEED VALVE to purge air from the test kit.

6.7.12 Close HIGH SIDE BLEED VALVE.

6.7.13 After gauge reaches upper end of scale, close LOW SIDE BLEED VALVE. The reading on gauge is the "Setup Pressure."

6.7.14 Close SHUTOFF VALVE #2. Test kit and unit are now ready to begin test.

6.8 Evaluate the Drop Across Double Check Valve Assembly #1 Check in Direction of Flow

6.8.1 Determine whether static pressure drop across CHECK VALVE #1 is **1 psi or greater** by performing the following:

A. Open LOW SIDE BLEED VALVE to reestablish pressure in the zone between the checks.

B. Close LOW SIDE BLEED VALVE.

6.8.2 Observe gauge reading **and** perform **one** of the following actions, as appropriate:

NOTE:
A stable gauge pressure reading of **1 psi or greater** indicates CHECK VALVE #1 is holding tight with adequate pressure differential.

A. **If** gauge pressure reading is **1 psi or greater, then** check "HOLDING TIGHT" on CP4-SM-2103-F02.

B. **If** gauge pressure drops below **1 psi**, **then** troubleshoot **and** repair CHECK VALVE #1 according to Appendix E.

6.8.3 **If** CHECK VALVE #1 **CANNOT** be repaired, **then** perform the following:

A. Check "FAILED" on CP4-SM-2103-F02.

B. Record reason for failure in **Comments Section** of CP4-SM-2103-F02.

C. Proceed to Section **8.0**.

6.9 Test Double Check Valve Assembly #2 Check for Leakage Against Backpressure

6.9.1 Perform the following to determine whether CHECK VALVE #2 is holding tight in backpressure conditions:

A. Open HIGH SIDE NEEDLE VALVE.

B. To purge air from bypass line, open BYPASS NEEDLE VALVE **and** then close BYPASS NEEDLE VALVE.

C. Connect bypass hose to TEST COCK #4.

D. Open TEST COCK #4.

E. To reestablish setup pressure in zone between the two checks, open LOW SIDE BLEED VALVE **and** then close LOW SIDE BLEED VALVE.

6.9.2 Observe gauge reading for **one** of the following:

- No movement in the gauge indicates that CHECK VALVE #2 is holding tight against backpressure.
- A slight drop in gauge pressure, then stability, indicates there is CHECK VALVE #2 disc compression but valve is holding tight.
- A constant drop in gauge pressure to **0 psi** indicates CHECK VALVE #2 is leaking.

6.9.3 Perform **one** of the following actions, as appropriate:

A. **If** CHECK VALVE #2 is holding tight, **then** check "HOLDING TIGHT" on CP4-SM-2103-F02 **and** proceed to Section **6.10**.

B. **If** CHECK VALVE #2 is **NOT** holding tight, **then** troubleshoot **and** repair CHECK VALVE #2 according to Appendix E.

6.9.4 **If** CHECK VALVE #2 **CANNOT** be repaired, **then** perform the following:

A. Check "FAILED" on CP4-SM-2103-F02.

B. Record reason for failure in **Comments Section** of CP4-SM-2103-F02.

C. Proceed to Section **8.0**.

6.10 Test the Double Check Valve Assembly #2 Shutoff Valve for Leakage

6.10.1 Close TEST COCK #2 **and** perform the following to determine whether SHUTOFF VALVE #2 is holding tight:

NOTE:
No movement in the gauge pressure indicates SHUTOFF VALVE #2 is holding tight.
A drop in gauge pressure indicates SHUTOFF VALVE #2 is leaking.

A. **If** there is no movement in the gauge pressure, **then** check "HOLDING TIGHT" on CP4-SM-2103-F02.

B. **If** there is a drop in gauge pressure, **then** perform the following:

1. Contact Supervisor for additional isolation assistance.

2. **If** flow can be stopped by shutting off another valve downstream, **then** shut off valve **and** retest.

3. **If** flow **CANNOT** be stopped by shutting off a downstream valve**, then** troubleshoot **and** repair SHUTOFF VALVE #2 according to Appendix E.

6.10.2 **If** SHUTOFF VALVE #2 **CANNOT** be repaired, **then** perform the following:

A. Check "FAILED" on CP4-SM-2103-F02.

B. Record reason for failure in **Comments Section** of CP4-SM-2103-F02.

C. Proceed to Section **8.0**.

6.10.3 Perform the following:

A. Close all test cocks.

B. Disconnect all hoses.

C. Close all test kit NEEDLE VALVES.

6.11 Evaluate the Drop Across Double Check Valve Assembly #2 Check in Direction of Flow

6.11.1 Determine whether pressure drop across CHECK VALVE #2 is **greater than (>) 1 psi** by performing the following:

A. Connect HIGH SIDE HOSE of the test kit to TEST COCK #3.

B. Connect LOW SIDE HOSE of the test kit to TEST COCK #4.

C. Open TEST COCK #4.

D. Open TEST COCK #3.

E. Open LOW SIDE BLEED VALVE to purge air from the test kit.

F. Open HIGH SIDE BLEED VALVE to purge air from the test kit.

G. Close HIGH SIDE BLEED VALVE.

H. Close LOW SIDE BLEED VALVE.

6.11.2 Observe gauge **and** perform **one** the following actions, as appropriate:

NOTE:
A stable pressure reading of **1 psi or above** indicates CHECK VALVE #2 is holding tight with adequate differential pressure.
A pressure reading **below 1 psi** indicates repairs are required to CHECK VALVE #2.

A. **If** there is a stable pressure reading of **1 psi or above**, **then** check "HOLDING TIGHT" on CP4-SM-2103-F02.

B. **If** pressure drops **below 1 psi**, **then** troubleshoot **and** repair CHECK VALVE #2 according to Appendix E.

6.11.3 **If** CHECK VALVE #2 **CANNOT** be repaired, **then** perform the following:

A. Check "FAILED" on CP4-SM-2103-F02.

B. Record reason for failure in **Comments Section** of CP4-SM-2103-F02.

C. Proceed to Section **8.0**.

6.11.4 Perform the following:

A. Close all test cocks.

B. Disconnect all hoses.

C. Remove fittings and drain test kit.

D. Open SHUTOFF VALVE #2.

6.11.5 Proceed to Section **8.0**.

6.12 Replacement of Backflow Prevention Devices

6.12.1 Remove existing BPD.

6.12.2 Install replacement BPD.

6.12.3 Perform test on replaced BPD using appropriate section of this procedure, based on BPD type.

7.0 ACCEPTANCE CRITERIA

None

8.0 POST PERFORMANCE WORK ACTIVITIES

8.1 **If** work was performed on a BPD that supports a sprinkler system, **then** notify Fire Services that the work is complete **and** request they check the sprinkler system and reseal the shutoff valves.

8.2 **If** BPD passed inspection and performance test, **then** perform the following:

8.2.1 Complete a Test Date sticker for BPD.

8.2.2 Attach Test Date sticker to round brass tag on BPD.

8.2.3 Complete CP4-SM-2103-F01 and/or CP4-SM-2103-F02, as applicable, **and** forward to Supervisor for review.

8.3 **If** BPD did **NOT** pass inspection and/or performance test, **then** replacement is required. Request equipment owner initiate a new work request.

9.0 RECORDS

9.1 Records Generated

The following records may be generated by this procedure:

- CP4-SM-2103-F01, *Reduced Pressure Principal Assembly Backflow Prevention Device Report*
- CP4-SM-2103-F02, *Double Check Valve Assembly Backflow Prevention Device Report*

Forms are to be completed in accordance with CP3-OP-0024, *Forms Control*.

9.2 Records Disposition

The records are to be maintained in accordance with CP3-RD-0010, *Records Management Process*.

Appendix A – Acronyms/Definitions

ACRONYMS

ASSE – American Society of Sanitary Engineers

BPD – Backflow Prevention Device

D&R – Deactivation & Remediation

IH – Industrial Hygiene

LOTO – Lockout Tagout

M&TE – Measuring and Test Equipment

PGDP – Paducah Gaseous Diffusion Plant

PM – Preventive Maintenance

RBA – Radiological Buffer Area

WCP – Work Control Package

DEFINITIONS

Double Check Valve Backflow Prevention Device – An assembly composed of two independently acting, approved check valves including tightly closing shut-off valves attached at each end of the assembly and fitted with properly located test points. This assembly is only used to protect against a non-health hazard (that is, pollutant).

Owner – Person or designated representative (attendant) who is responsible for the system(s) that the backflow device serves.

Reduced Pressure Zone Principal Backflow Prevention Device – An assembly containing two independently acting, approved check valves together with a hydraulically operating, mechanically independent pressure differential relief valve located between check valves and at the same time below first check valve. The unit also includes properly located test points and tightly closing shut-off valves at each end of the assembly. This assembly is designed to protect against a health hazard (that is, contaminant).

Appendix B – Watts TK-99E

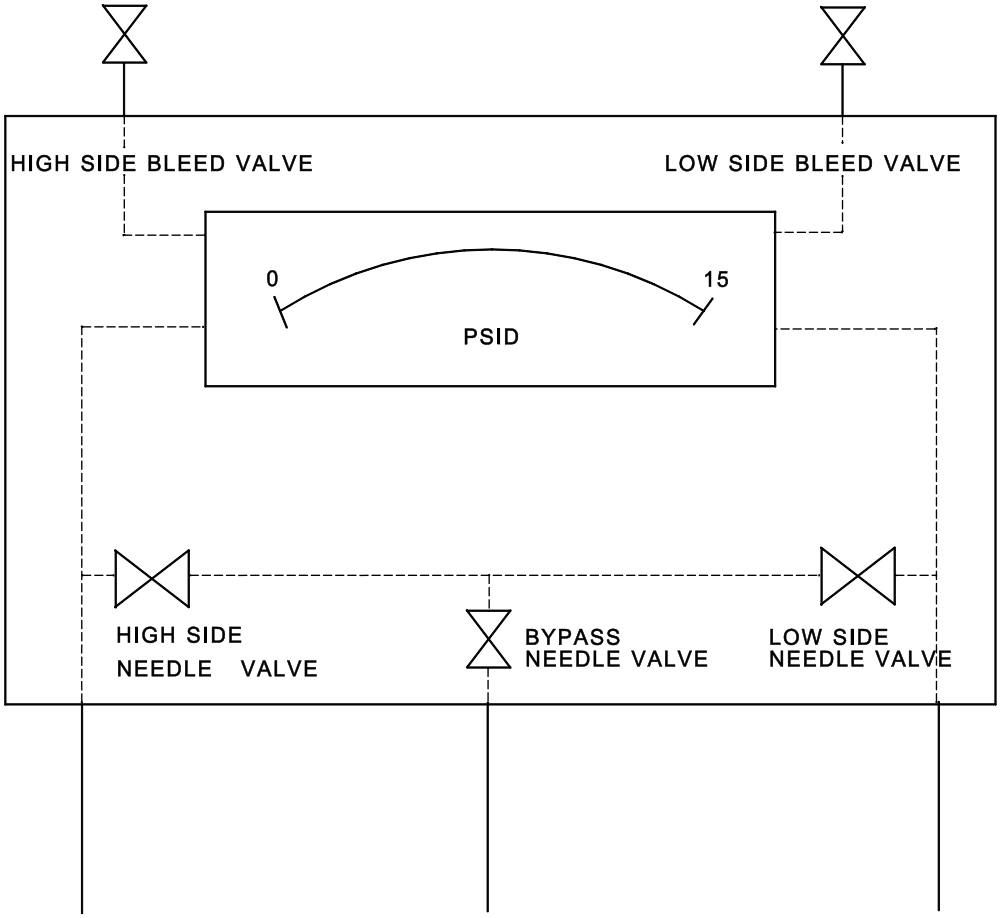

Appendix C – Reduced Pressure Principal Backflow Prevention Device

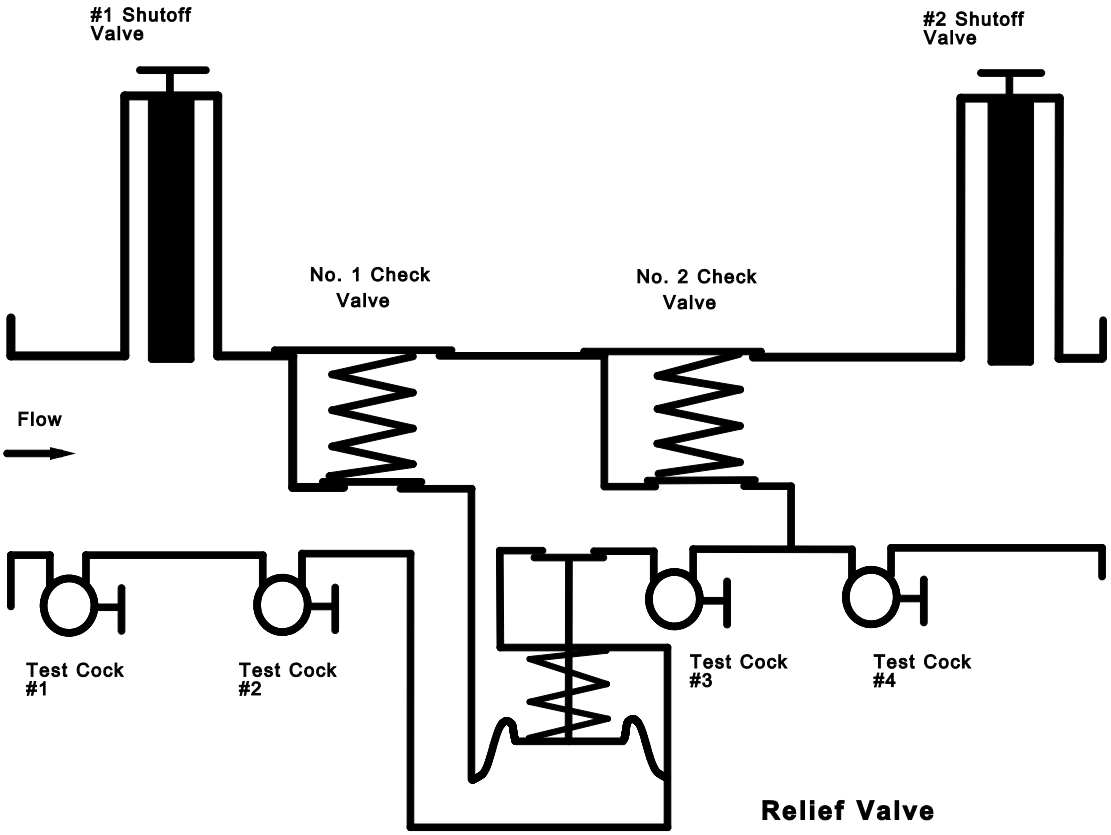

Appendix D – Double Check Valve Backflow Prevention Device

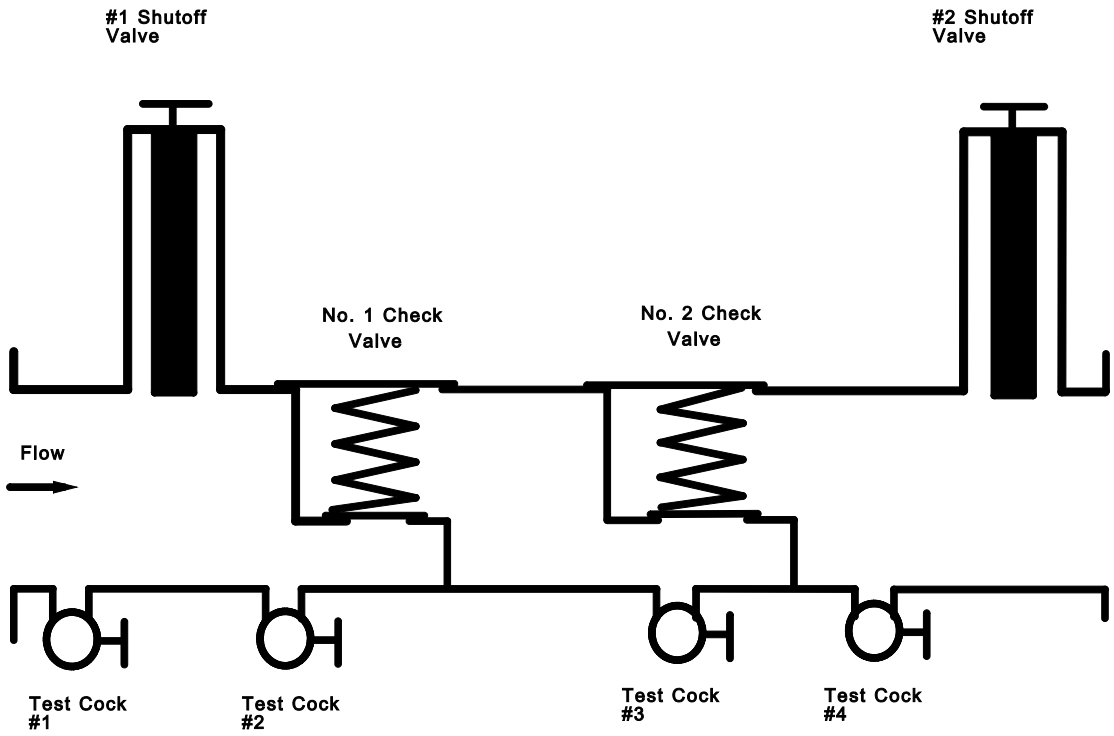

Appendix E – Troubleshooting Guide

WITH DIFFERENTIAL PRESSURE GAUGE	
SYMPTOM NO. 1: Check Differential Across No. 1 check Valve	
READING	**PROBLEM**
2 to 3 PSID	Leak in No. 1 or No. 2 check valve
6 to 8 PSID and steady	Malfunctioning pressure relief valve
2 to 7 PSID fluctuating	Inlet pressure fluctuating

WITH DIFFERENTIAL PRESSURE GAUGE	
SYMPTOM NO. 2: Check Differential Across No. 1 Check Valve	
READING	**PROBLEM**
2 to 3 PSID	No. 1 check valve held open
6 to 8 PSID and steady	Malfunctioning pressure relief valve

WITHOUT DIFFERENTIAL PRESSURE GAUGE	
SYMPTOM NO. 1 and NO. 2: A.) Close Gate Valve No. 2	
RESULT	**PROBLEM**
If discharge stops	Leak in No. 2 check valve
If discharge does not stop	Go to “B”
B.) Open No. 4 Test Cock to Produce a Flow Greater Than Differential Relief Valve Discharge	
RESULT	**PROBLEM**
If discharge stops	Leak in No. 1 check valve
If discharge does not stop	Malfunctioning pressure relief valve

SYMPTOM	CAUSE	SOLUTION
1. Continuous discharge from relief valve during NO-FLOW condition (Discharge stops with water flow).	a. Debris fouling No. 1 check valve.	a. Inspect and clean.
	b. Outlet pressure higher than inlet pressure and debris fouling No. 2 check valve.	b. Inspect and clean.
With this symptom, the pressure drop across the No. 1 check valve would be 2 to 3 PSID.	c. Disc holder/stem not moving freely in guide(s).	c. Inspect for dirt or other foreign material.
	d. Damaged seat or seat disc.	d. Inspect and replace. Seat disc can be reversed.
If a flow of water (more than the discharge) is created through the valve, the pressure drop should increase to approximately 7 PSID.	e. Leakage under seat disc due to dirt or damaged disc holder or disc.	e. Inspect and replace or repair.
2. Intermittent discharge from relief valve during NO-FLOW condition.	a. Inlet line pressure variations causing relief valve to discharge.	a. Eliminate or reduce pressure variations.
With this symptom, the pressure drop across the No. 1 check valve would be varying from about 2 to 7 PSID.	b. Pressure surges (water hammer) causing relief valve to discharge as pressure wave passes through "ZONE”	b. Eliminate or reduce pressure surges.
3. Continuous discharge from relief valve during FLOW and NO-FLOW conditions.	a. Seat disc dislodged from cavity in the mainstem (this can be caused by pressure surges during initial filling of system lines).	a. Reposition disc in mainstem cavity. Re-pressurize system slowly.
	b. Debris fouling the relief valve seat.	b. Inspect and clean.
With this symptom, the pressure drop across the No. 1 check valve would be 7 PSID or more at all times.	c. Debris fouling the relief valve seat passage	c. Inspect and clean.
	d. Dirt or scaling jamming mainstem or spring button.	d. Inspect and clean or replace.
	e. Leakage at mainstem o-ring/diaphragm.	e. Inspect and clean or replace o-ring and/or mainstem.

Appendix E – Troubleshooting Guide (continued)

SYMPTOM	CAUSE	SOLUTION
4. Relief valve does not open above 2.0 PSID during field testing.	a. Outlet gate valve not closed completely.	a. Check for debris blocking gate
	b. Plugged low-pressure hydraulic passage (from "ZONE" to inner diaphragm.)	b. Inspect and clean.
	c. Improper alignment of internal parts during re-assembly (causing high resistance to movement).	c. Disassemble and center the button, spring and mainstem.
5. First check pressure drop Is low (less than 5 PSID) during field testing.	a. Debris fouling first check seat.	a. Inspect and clean.
	b. Debris fouling second check seat with backpressure.	b. Inspect and clean.
	c. Inlet pressure variations causing inaccurate gauge reading.	c. Eliminate pressure variations.
	d. Damaged seat or seat disc.	d. Inspect and replace as required.
	e. Worn guide, bushings or stem.	e. Inspect and replace as required.
6. Second check fails to hold backpressure during field testing.	a. Outlet gate valve not closed completely.	a. Check for debris blocking gate.
	b. Debris fouling second check seat.	b. Inspect and clean.
	c. Disc holder/stem not moving freely in guide(s).	c. Inspect tor dirt or other foreign material.
	d. Damaged seat or seat disc.	d. Inspect and replace as required.
	e. Worn guide, bushings or stem.	e. Inspect and replace as required.

NOTE: If check valve seat disc has been severely out at the seat ring diameter, the assembly is being subjected to extremely high and repeated backpressure. Either thermal water expansion or water hammer are the most likely causes.

CP4-SM-2103-F01 – Reduced Pressure Principal Assembly Backflow Prevention Device Report

6.1.1	Location of Device: _____ Device Owner: _____ Manufacturer: _____ Model: _____ Size: _____ Serial No.: _____ BFP No.: _____ Test Equipment: _____ Serial No.: _____ Calibration Due Date: _____ Line Pressure at Time of Test: _____
6.2.5A	Relief Valve Opening Point : _____
6.3.8A	CHECK VALVE #2 (Against Backpressure) Holding Tight ☐
6.4.2A	CHECK VALVE #1 (Directional Flow) Holding Tight ☐ (**3.0 psi** above relief valve opening point) RP_____PSID
6.5.1A	SHUTOFF VALVE #2 Holding Tight ☐
6.6.2A	CHECK VALVE #2 (Directional Flow) Holding Tight ☐ RP_____PSID

	CHECK VALVE #1	**CHECK VALVE #2**	**DIFFERENTIAL PRESSURE RELIEF VALVE**
TROUBLE-SHOOTING AND REPAIRS (Refer to Appendix E) **N/A** ☐	**Cleaned** ☐ **Replaced:** Disc ☐ Pin Retainer ☐ Spring ☐ Hinge Pin ☐ Guide ☐ Seat ☐ Other ☐ Diaphragm ☐ (Describe): _____ _____	**Cleaned** ☐ **Replaced:** Disc ☐ Pin Retainer ☐ Spring ☐ Hinge Pin ☐ Guide ☐ Seat ☐ Other ☐ Diaphragm ☐ (Describe): _____ _____	**Cleaned** ☐ Cleaned Sensing Line ☐ **Replaced:** Upper Disc ☐ Lower Disc ☐ Spring ☐ Diaphragm ☐ Lower Seat ☐ Lower Spacer ☐ Other (Describe): ☐ _____

Comments: _____

_____

_____

_____

_____

_____

PASSED ☐ **FAILED** ☐

Tested By: _____ _____ _____ _____
Printed Name/Signature | Badge Number | Date | Time

Reviewed By: _____ _____ _____ _____
Supervisor Printed Name/Signature | Badge Number | Date | Time

CP4-SM-2103-F02 – Double Check Valve Assembly Backflow Prevention Device Report

6.7.1	Location of Device: _____ Device Owner: _____ Manufacturer: _____ Model: _____ Size: _____ Serial No.: _____ BFP No.: _____ Test Equipment: _____ Serial No.: _____ Calibration Due Date: _____ Line Pressure at Time of Test: _____
6.8.2A	CHECK VALVE #1 (Directional Flow) Holding Tight ☐ RP_____PSID
6.9.3A	CHECK VALVE #2 (Against Backpressure) Holding Tight ☐
6.10.1A	SHUTOFF VALVE #2 Holding Tight ☐
6.11.2A	CHECK VALVE #2 (Directional Flow) Holding Tight ☐ RP_____PSID

	CHECK VALVE #1	**CHECK VALVE #2**
TROUBLE-SHOOTING AND REPAIRS (Refer to Appendix E) **N/A** ☐	**Cleaned** ☐ **Replaced:** Disc ☐ Pin Retainer ☐ Spring ☐ Hinge Pin ☐ Guide ☐ Seat ☐ Other ☐ Diaphragm ☐ (Describe): _____ _____	**Cleaned** **Replaced:** Disc ☐ Pin Retainer ☐ Spring ☐ Hinge Pin ☐ Guide ☐ Seat ☐ Other ☐ Diaphragm ☐ (Describe): _____ _____

Comments: _____

_____

_____

_____

_____

_____

PASSED ☐ **FAILED** ☐

Tested By: _____ _____ _____ _____
Printed Name/Signature | Badge Number | Date | Time

Reviewed By: _____ _____ _____ _____
Supervisor Printed Name/Signature | Badge Number | Date | Time