APPENDIX C

DRAWINGS (CD)

THIS PAGE INTENTIONALLY LEFT BLANK

Appendix C1
As-Built Design Drawings

DESIGN FOR C-400 STEAM INJECTION TREATABILITY STUDY

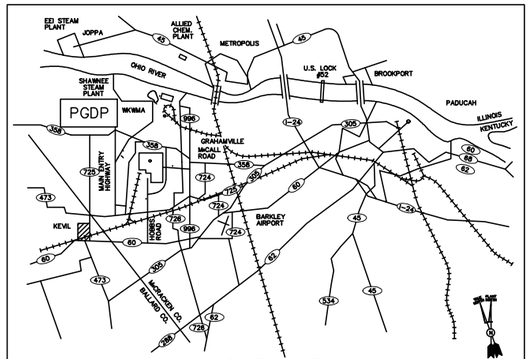

VICINITY MAP

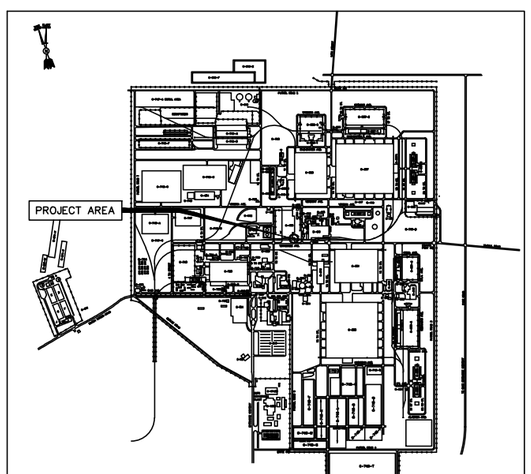

PADUCAH GASEOUS DIFFUSION PLANT

DRAWING INDEX	
DWG NO.	TITLE
G7DC40000A001	COVER SHEET
C7DC40000A027	SITE PLAN
C7DC40000A028	STEAM INJECTION WELLS AND TEMPERATURE MONITORING POINTS
P7DC40000A058	SYMBOLS, IDENTIFICATION, ABBREVIATIONS, NOTES, AND REQUIREMENTS
P7DC40000A059	PROCESS FLOW DIAGRAM
P7DC40000A060	PIPING AND INSTRUMENTATION DIAGRAM (SHEET 1)
P7DC40000A061	PIPING AND INSTRUMENTATION DIAGRAM (SHEET 2)
P7DC40000A062	PIPING PLAN
P7DC40000A062-1	PIPING PLAN ISOMETRICS
P7DC40000A062-2	PIPING PLAN DETAILS
P7DC40000A063	WELLHEAD AND PIPING DETAILS
E7DC40000A046	ELECTRICAL POWER ONE-LINE DIAGRAM
E7DC40000A047	ELECTRICAL POLE, TRANSFORMER, & PDP DETAILS
E7DC40000A048	LIGHTING DETAILS
E7DC40000A049	COMMUNICATIONS DIAGRAM

REV.	1
DRW. RLM	8/17/15
CHKR. JE	8/17/15
R.E.D. –	
T.R. –	
APPD. –	
DRAWING APPROVALS	DATE

LPE

DATE

PROFESSIONAL SEAL

REV.	DATE	DESCRIPTION	DRAWN BY	DRAFT CHK	PROJ ENGR	LEAD ENGR	CONF CTRL/ NUCL SFTY	FAC MGR	E&TS MGR
	8/17/15	AS BUILT FOR ESD FA1550	RLM	JE	CRE	CRE	–	–	–
0	5/30/14	ISSUED FOR CONSTRUCTION	JE	JE	CRE	CRE			

DRAWING REVISIONS

FLUOR. PADUCAH DEACTIVATION PROJECT
DOE Prime Contract #DE-DT0007774

U.S. DEPARTMENT OF ENERGY
DOE PORTSMOUTH/PADUCAH PROJECT OFFICE
PADUCAH GASEOUS DIFFUSION PLANT

LATA Environmental Services of Kentucky, LLC
managed for the DEPARTMENT OF ENERGY under U.S. GOVERNMENT contract DE-AC30-10CC40020
Paducah, Kentucky

ERM
Environmental Resources Management
1218 3rd AVENUE, SEATTLE WASHINGTON
(425) 462-8591

DOE CONTRACT NO. DE-AC30-10CC40020

PROJECT NAME:
C-400 STEAM INJECTION TREATABILITY STUDY

TITLE:
TREATABILITY STUDY COVER SHEET

CAD FILE NAME	BUILDING	PLANT	CLASS
A001_COVER SHEET.DWG	C-400	PGDP	U

SCALE:	DRAWING NUMBER	REV
AS SHOWN	G7DC40000A001	1

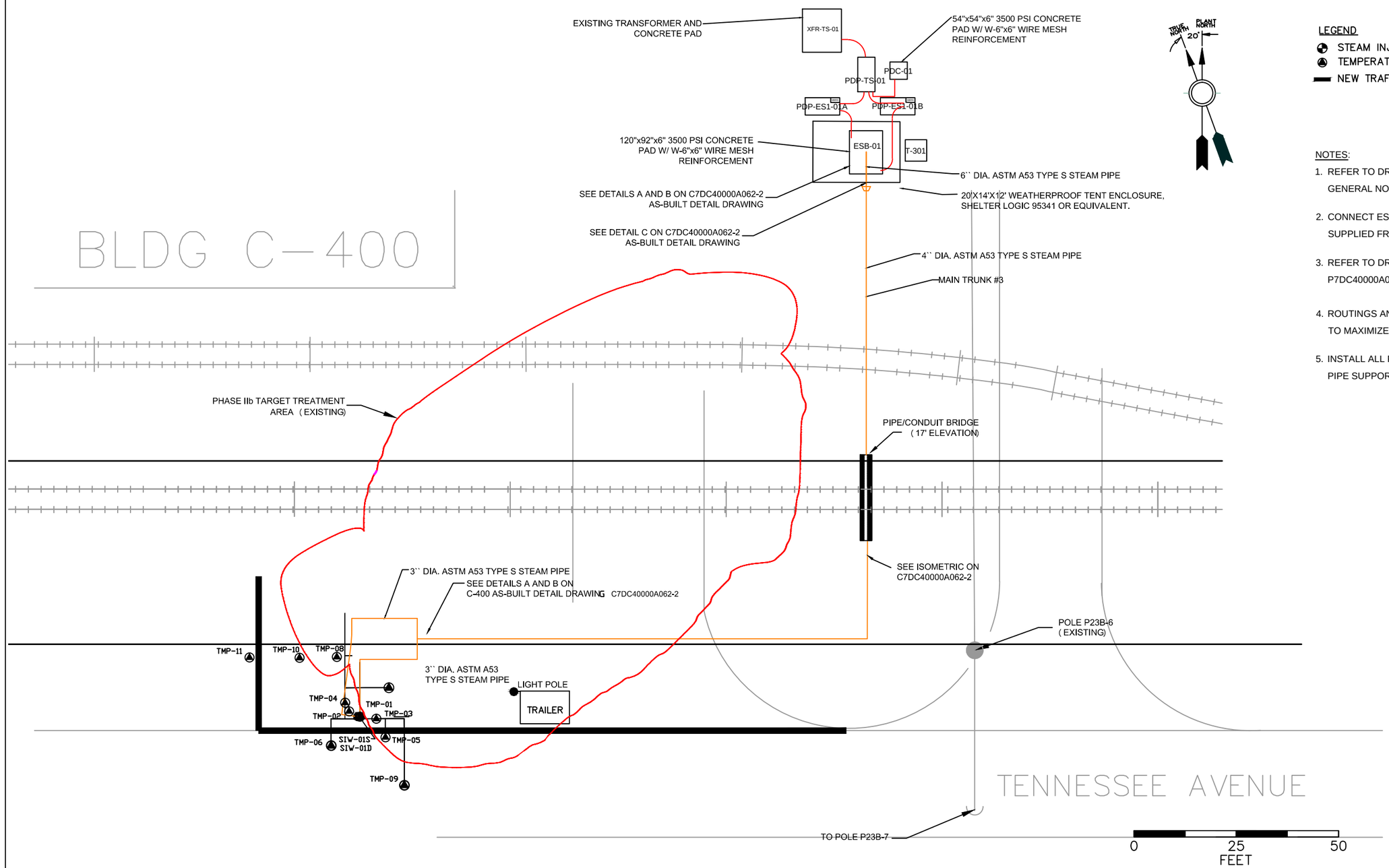

LEGEND

- STEAM INJECTION WELLS
- TEMPERATURE MONITORING POINT
- NEW TRAFFIC BARRIERS

NOTES:

1. REFER TO DRAWING P7DC40000A058 FOR SYMBOLS, ABBREVIATIONS, GENERAL NOTES, AND OTHER REQUIREMENTS.
2. CONNECT ESB-01 FEEDWATER TO EXISTING PROCESS WATER LINE SUPPLIED FROM FIRE HYDRANT FH-1.
3. REFER TO DRAWINGS P7DC40000A060, P7DC40000 A061, P7DC40000A062-1, P7DC40000A062-2, A063 FOR PIPING DETAILS.
4. ROUTINGS AND LOCATIONS ARE DIAGRAMMATIC. INSTALL AS NEEDED TO MAXIMIZE EFFICIENCY.
5. INSTALL ALL PIPING NORTH OF JERSEY BARRIERS ABOVEGROUND ON PIPE SUPPORTS.

REV.	1
DRW.	RLM 8/17/15
CHKR.	JE 8/17/15
R.E.D.	–
T.R.	–
APPD.	–
DRAWING APPROVALS	DATE

LPE

DATE

PROFESSIONAL SEAL

REV.	DATE	DESCRIPTION	DRAWN BY	DRAFT CHK	PROJ ENGR	LEAD ENGR	CONF CTRL/ NUCL SFTY	FAC MGR	E&TS MGR
1	8/17/15	AS BUILT FOR ESD FA1550	RLM	JE	CRE	CRE	–	–	–
0	5/30/14	ISSUED FOR CONSTRUCTION	JE	JE	CRE	CRE			

DRAWING REVISIONS

FLUOR.

PADUCAH DEACTIVATION PROJECT
DOE Prime Contract #DE-DT0007774

U.S. DEPARTMENT OF ENERGY
DOE PORTSMOUTH/PADUCAH PROJECT OFFICE
PADUCAH GASEOUS DIFFUSION PLANT

LATA Environmental Services of Kentucky, LLC
managed for the DEPARTMENT OF ENERGY under U.S. GOVERNMENT contract DE-AC30-10CC40020 Paducah, Kentucky

ERM
Environmental Resources Management
1218 3rd AVENUE, SEATTLE WASHINGTON
(425) 462-8591

DOE CONTRACT NO. DE-AC30-10CC40020

PROJECT NAME:
C-400 STEAM INJECTION TREATABILITY STUDY

TITLE:
TREATABILITY STUDY SITE PLAN

CAD FILE NAME	BUILDING	PLANT	CLASS
C:\Users\rodney.miller\AppData\Local\Temp\Temp1_C-400 S I T STUDY.zip\ZIP FILE\C7DC40000A027 REV1 - Treatability Study Site Plan.dwg	C-400	PGDP	U

SCALE:	DRAWING NUMBER	REV
AS SHOWN	C7DC40000A027	1

C:\Users\rodney.miller\AppData\Local\Temp\Temp1_C-400 S I T STUDY.zip\ZIP FILE\C7DC40000A027 REV1 - Treatability Study Site Plan.dwg, Scale: 1:25

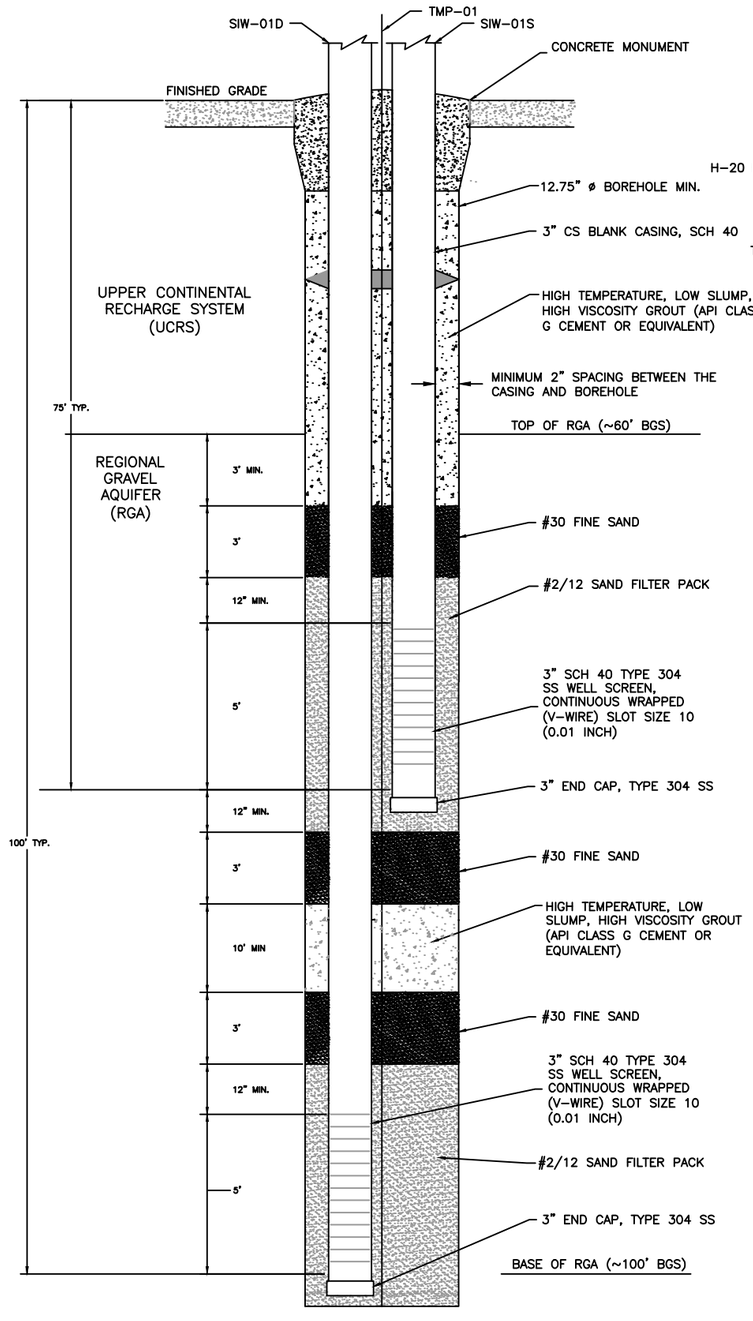

NESTED STEAM INJECTION WELL (TYP.)
(SIW-01S, SIW-01D)
NOT TO SCALE

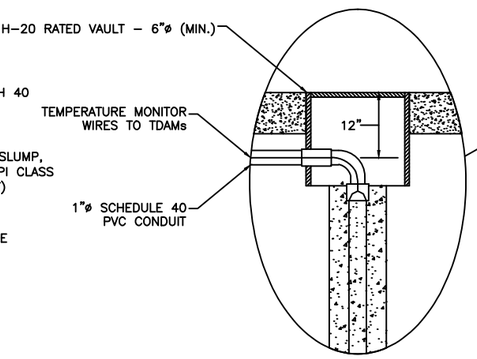

TMP-05
TMP-06
TMP-09

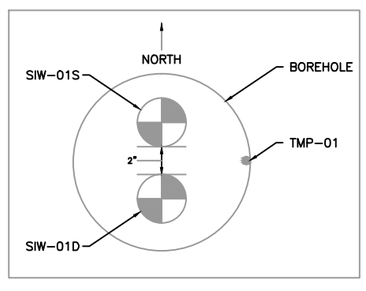

PLAN VIEW
SIW-01S, SIW-01D
NOT TO SCALE

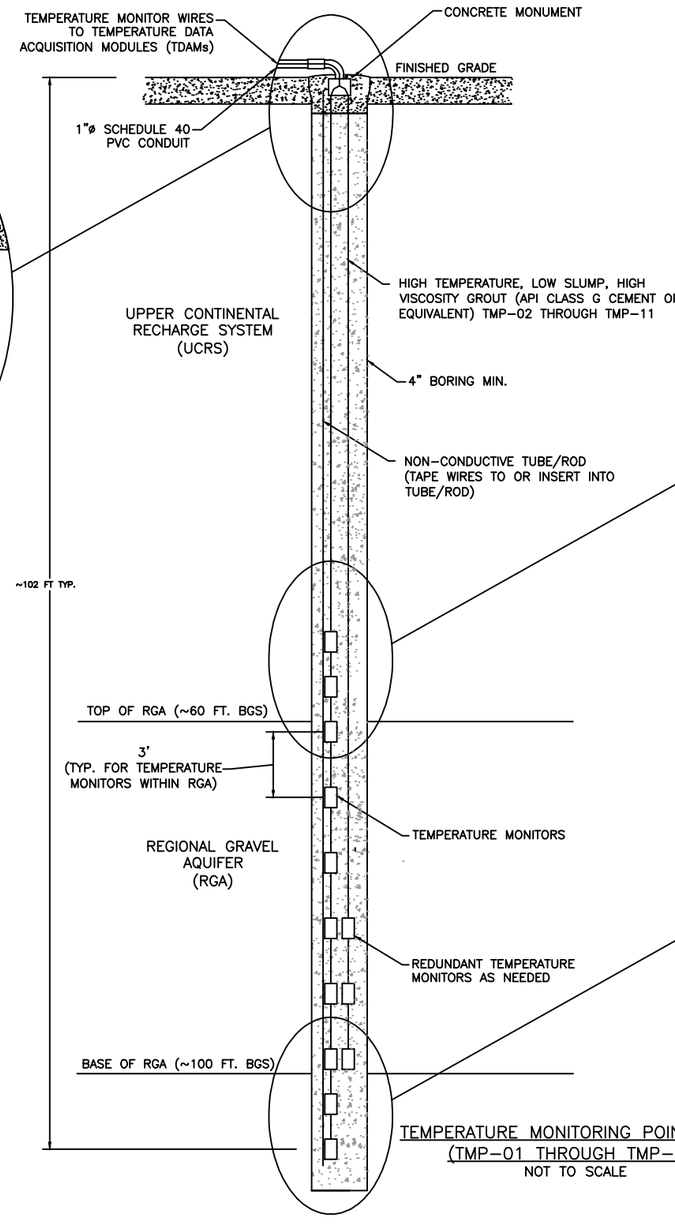

TEMPERATURE MONITORING POINT (TYP.)
(TMP-01 THROUGH TMP-11)
NOT TO SCALE

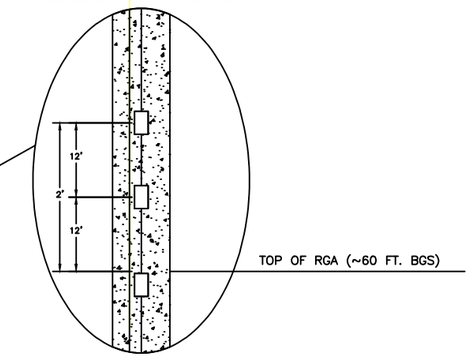

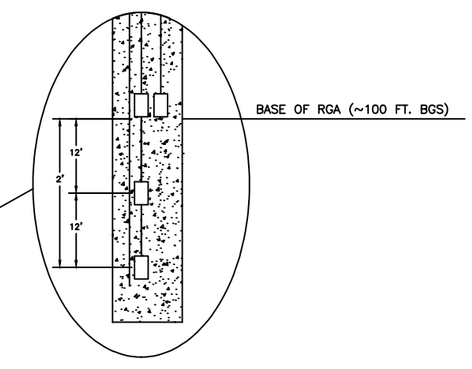

NOTES:

1. TOP AND BASE OF RGA WILL BE DETERMINED IN FIELD DURING DRILLING.
2. FINAL DEPTH OF TEMPERATURE MONITORS AND STEAM INJECTION WELLS WILL BE BASED ON FIELD CONDITIONS TO A TOLERANCE OF ± 6 INCHES.
3. INSTALL REDUNDANT TEMPERATURE MONITORS IF THERMOCOUPLES ARE USED.
4. ROUTE TEMPERATURE MONITOR CONDUITS ABOVEGROUND ON NORTH SIDE OF JERSEY BARRIERS.
5. FOR TMP-05, TMP-06, AND TMP-09, ROUTE TEMPERATURE MONITOR WIRES UNDERGROUND ON SOUTH SIDE AND ABOVEGROUND ON NORTH SIDE OF JERSEY BARRIERS.
6. FOR EFFICIENCY, TEMPERATURE MONITOR WIRES CAN BE COMBINED INTO LARGER DIAMETER CONDUITS PRIOR TO TDAMs.

REV.	1
DRW. RLM	8/17/15
CHKR. JE	8/17/15
R.E.D. –	
T.R. –	
APPD. –	
DRAWING APPROVALS	DATE

LPE

DATE

PROFESSIONAL SEAL

REV.	DATE	DESCRIPTION	DRAWN BY	DRAFT CHK	PROJ ENGR	LEAD ENGR	CONF CTRL/ NUCL SFTY	FAC MGR	E&TS MGR
1	8/17/15	AS BUILT FOR ESD FA1550	RLM	JE	CRE	CRE	–	–	–
0	5/30/14	ISSUED FOR CONSTRUCTION	JE	JE	CRE	CRE			

DRAWING REVISIONS

FLUOR.

PADUCAH DEACTIVATION PROJECT
DOE Prime Contract #DE-DT0007774

U.S. DEPARTMENT OF ENERGY
PADUCAH, PORTSMOUTH PROJECT OPERATIONS,
PADUCAH GASEOUS DIFFUSION PLANT

LATA Environmental Services of Kentucky, LLC
managed for the DEPARTMENT OF ENERGY under U.S. GOVERNMENT contract DE-AC30-10CC40020
Paducah, Kentucky

ERM
Environmental Resources Management
1218 3rd AVENUE, SEATTLE WASHINGTON
(425) 462-8591

DOE CONTRACT NO. DE-AC30-10CC40020

PROJECT NAME:
C-400 STEAM INJECTION TREATABILITY STUDY

TITLE:
TREATABILITY STUDY
STEAM INJECTION WELLS AND
TEMPERATURE MONITORING POINTS

CAD FILENAME	BUILDING	PLANT	CLASS
A028_SIW & TMP DETAILS.DWG	C-400	PGDP	U

SCALE:	DRAWING NUMBER	REV
N.T.S.	C7DC40000A028	1

GENERAL EQUIPMENT

- COOLING TOWER
- PRESSURE VESSEL
- FLAT BOTTOM TANK w/CLOSED TOP
- CONE BOTTOM TANK
- SLANT PLATE CLARIFIER OR SEPARATOR
- AIR COMPRESSOR
- HEAT EXCHANGER FOR VAPOR SERVICE (FIN TUBE)
- ELECTRIC HEAT EXCHANGER
- HEAT EXCHANGER FOR LIQUID SERVICE (PLATE OR SHELL & TUBE)
- CENTRIFUGAL FAN
- CENTRIFUGAL PUMP
- ROTARY PUMP
- DIAPHRAGM PUMP
- VACUUM BLOWER
- FAN (FAN)
- CENTRIFUGAL PUMP (IN TANK) (M)
- ELECTRICAL COIL HEATER (STEAM)

GENERAL EQUIPMENT (cont'd)

- ROTARY, CENTRIFUGAL & WATER SEALED COMPRESSORS & VACUUM PUMPS
- SUMP PUMP (M)
- BLOWER SILENCER

GENERAL PIPING

- PRIMARY PROCESS FLOW
- SECONDARY PROCESS OR UTILITY FLOW
- CAM LOCK CONNECTION
- SOLIDS FLOW OR INTERMITTENT FLOW
- CONCENTRIC REDUCER OR INCREASER
- ECCENTRIC REDUCER OR INCREASER
- FLEXIBLE CONNECTION WITH QUICK CONNECTS
- FLEXIBLE HOSE WITH FLANGED ENDS
- FLANGED JOINT
- BLANK FLANGED
- DRAIN
- STEAM TRAP WITH INTEGRAL STRAINER (T)
- ATMOSPHERIC VENT
- PIPE SLOPE
- BASKET STRAINER, BAG FILTER, OR MOISTURE SEPARATOR
- INSULATION
- INSULATION & HEAT TRACE
- ENERGY METER (Σ)
- STRAINER
- STEAM BOILER

MISCELLANEOUS

DWG.# — LINE BREAK OR RESUMPTION POINT

VALVE NOTATION

CONTROL VALVE BODIES

OPEN		CLOSED
	GATE (GA)	
	BALL (BA)	
	BUTTERFLY (BF)	
	NEEDLE (NE)	
	CHECK (CK)	
	GLOBE (GL)	
	STOP CHECK (SC)	

DIAPHRAGM ACTUATED VALVES (TYPICAL)

HV

NO — NORMAL MODE *(SEE NOTE BELOW)*

FC — FAILURE MODE – FO,FC,FL,FI

NOTE:

FAIL POSITIONS ALL BODY STYLES
- FO – FAIL OPEN
- FC – FAIL CLOSED
- FL – FAIL LOCKED/LAST POSITION
- FI – FAIL INDETERMINATE
- CSO – CAR SEAL/LOCK OPEN
- CSC – CAR SEAL/LOCK CLOSED

NORMAL MODE IDENTIFICATION (I.E. NO. NC.) SHOULD ONLY BE USED FOR ON–OFF TYPE VALVES WHOSE POSITION CANNOT BE SHOWN BY SHADING THE VALVE BODY.

VALVE ACTUATORS

- HAND OR HAND WHEEL
- PNEUMATIC DIAPHRAGM
- SOLENOID (S)
- FLOAT

INSTRUMENT IDENTIFICATION

CT	CURRENT TRANSFORMER
EI	ENERGY INDICATION
ET	ENERGY TRANSMITTER
PG	PRESSURE GAUGE
PH	PHASE
KV	KILO VOLTAGE
VAC	VOLTS ALTERNATING CURRENT
VDC	VOLTS DIRECT CURRENT

GENERAL INSTRUMENTS

- INSTRUMENT FOR SINGLE MEASURED VARIABLE AND ANY NUMBER OF FUNCTIONS. INSTRUMENT IS FIELD MOUNTED
- INSTRUMENT IS MOUNTED IN FRONT OF LOCAL PANEL.
- CENTRAL PLC OR COMPUTER

GENERAL INSTRUMENTS (cont'd)

ALARM & CONTROL DESIGNATIONS

S/S HH H L LL — 0–100%

- HH – HI–HI ALARM (CONTROL ROOM)
- H – HI ALARM (CONTROL ROOM)
- L – LO ALARM (CONTROL ROOM)
- LL – LO–LO ALARM (CONTROL ROOM)
- S/S – START/STOP FROM CONTROL ROOM
- 0–100% – ADJUSTABLE RANGE OF OUTPUT
- HOA – HAND/OFF/AUTO
- OCA – OPEN/CLOSED/AUTO

- CONNECTION TO PROCESS OR INSTRUMENT INPUT
- ELECTRICAL SIGNAL OR INTERNAL SYSTEM LINK

TYPICAL CONNECTION ANY VARIABLE

- DIRECT CONNECTION PROCESS WITH ISOLATION VALVE

PRESSURE SENSOR CONNECTIONS

- DIRECT CONNECTED
- SIPHON TUBE

LINE NUMBER IDENTIFICATION

STM–100–4"–A

- MATERIAL SPECIFICATION
  - A – SCHEDULE 40 CARBON STEEL
  - B – SCHEDULE 40 PVC
  - C – SCHEDULE 40 GALVANIZED STEEL
  - T – STAINLESS STEEL TUBING
  - H – STAINLESS STEEL HOSE
- LINE SIZE
- SEQUENTIAL NUMBER
- FLOW TYPE
  - BDW – BLOWDOWN WATER
  - FWS – FEEDWATER
  - STM – STEAM

SELF–ACTIVATED PRESSURE DEVICES

- PRV — PRESSURE REDUCING REGULATOR WITH SENSOR TUBING ON DOWNSTREAM SIDE
- PSE — RUPTURE DISK OR SAFETY HEAD FOR PRESSURE RELIEF
- PSV — PRESSURE SAFETY VALVE

EQUIPMENT NUMBER IDENTIFICATION

ESB–100

- SEQUENCE NUMBER
- EQUIPMENT LETTER (SEE BELOW)

CV	CONTROL VALVE
ESB	ELECTRIC STEAM BOILER
FH	FIRE HYDRANT
HV	HAND VALVE
LC	LOAD CENTER
MMI	MAN–MACHINE INTERFACE
MS	MOISTURE SEPARATOR
P	POLE
PDP	POWER DISTRIBUTION PANEL
PRV	PRESSURE REGULATING VALVE
RGSC	RIGID GALVANIZED STEEL CONDUIT
SIW	STEAM INJECTION WELL
TDAM	TEMPERATURE DATA ACQUISITION MODULE
TM	TEMPERATURE MONITOR
TMP	TEMPERATURE MONITORING POINT
TS	TREATABILITY STUDY
XFR	TRANSFORMER

SECTION AND DETAIL KEY

- SECTION NUMBER OR DETAIL LETTER
- DRAWING ON WHICH SECTION OR DETAIL IS TAKEN
- DRAWING ON WHICH SECTION OR DETAIL IS SHOWN

PIPE INSPECTION AND TEST REQUIREMENTS

FLUID SERVICE	NON–CODE < 15 PSIG (FROM –20 TO 366°F)	ASME B31.3, CATEGORY D ≤ 150 PSIG (FROM –20 TO 366°F)	ASME B31.3, NORMAL > 15 PSIG AND NOT SPECIFIED CATEGORY D
CODE OF RECORD	NON–CODE	ASME B31.3 – 2012	ASME B31.3 – 2012
VISUAL INSPECTION REQUIRED	NONE	TO SATISFACTION OF CODE QUALIFIED EXAMINER	5% FABRICATION 100% LONGITUDINAL WELDS
RADIOGRAPHY REQUIRED	NONE	NONE	5% CIRCUMFERENTIAL AND MITER GROOVE WELDS OF EACH WELDER
TYPE OF LEAK TEST	NONE	PNEUMATIC/HYDROSTATIC	HYDROSTATIC
TEST PRESSURE	N/A	1.1/1.5 TIMES DESIGN PRESSURE	1.5 TIMES DESIGN PRESSURE
TEST DURATION	N/A	10 MIN. AT FULL TEST PRESSURE	10 MIN. AT FULL TEST PRESSURE
TEST PRESSURE TOLERANCE	N/A	+10%, –0%	+10%, –0%

GENERAL NOTES

1. DRAWINGS ARE DIAGRAMMATIC AND CANNOT SHOW ALL DETAILS. PROVIDE ALL FITTINGS AND COMPONENTS FOR COMPLETE SYSTEM.
2. COMPONENTS SHALL BE INSTALLED PER MANUFACTURER REQUIREMENTS.
3. COMPONENTS SHALL BE INSTALLED WITH SUFFICIENT CLEARANCE FOR OPERATION AND MAINTENANCE.
4. FLOW METERS, GAUGES, AND INSTRUMENTATION SHALL NOT BE SUBJECT TO PRESSURE TESTING UNLESS ALLOWED BY MANUFACTURER.
5. ALL CODED PIPING AND COMPONENTS SHALL BE QUALIFIED TO ASME B31.3 UNLESS OTHERWISE EXCLUDED.
6. STEAM HOSES SHALL HAVE DOUBLE–BRAIDED STAINLESS STEEL JACKET AND CLASS 150 L/J FLANGES.
7. WELL CASING AND SUBSURFACE COMPONENTS ARE NON–CODE.

REV.	1	
DRW.	RLM	8/17/15
CHKR.	JE	8/17/15
R.E.D.	–	
T.R.	–	
APPD.	–	
DRAWING APPROVALS		DATE

LPE

DATE

PROFESSIONAL SEAL

REV.	DATE	DESCRIPTION	DRAWN BY	DRAFT CHK	PROJ ENGR	LEAD ENGR	CONF CTRL/ NUCL SFTY	FAC MGR	E&TS MGR
1	8/17/15	AS BUILT FOR ESD FA1550	RLM	JE	CRE	CRE	–	–	–
0	5/30/14	ISSUED FOR CONSTRUCTION	JE	JE	CRE	CRE			

DRAWING REVISIONS

FLUOR. PADUCAH DEACTIVATION PROJECT
DOE Prime Contract #DE-DT0007774

U.S. DEPARTMENT OF ENERGY
DOE PORTSMOUTH/PADUCAH PROJECT OFFICE
PADUCAH GASEOUS DIFFUSION PLANT

LATA Environmental Services of Kentucky, LLC
managed for the DEPARTMENT OF ENERGY under U.S. GOVERNMENT contract DE–AC30–10CC40020 Paducah, Kentucky

ERM
Environmental Resources Management
1218 3rd AVENUE, SEATTLE WASHINGTON
(425) 462–8591

DOE CONTRACT NO. DE–AC30–10CC40020

PROJECT NAME:
C–400 STEAM INJECTION TREATABILITY STUDY

TITLE:
TREATABILITY STUDY
SYMBOLS, IDENTIFICATION, ABBREVIATIONS, NOTES, AND REQUIREMENTS

CAD FILE NAME	BUILDING	PLANT	CLASS
A058_MECHANCAL LEGEND.DWG	C–400	PGDP	U

SCALE:	DRAWING NUMBER	REV
AS SHOWN	P7DC40000A058	1

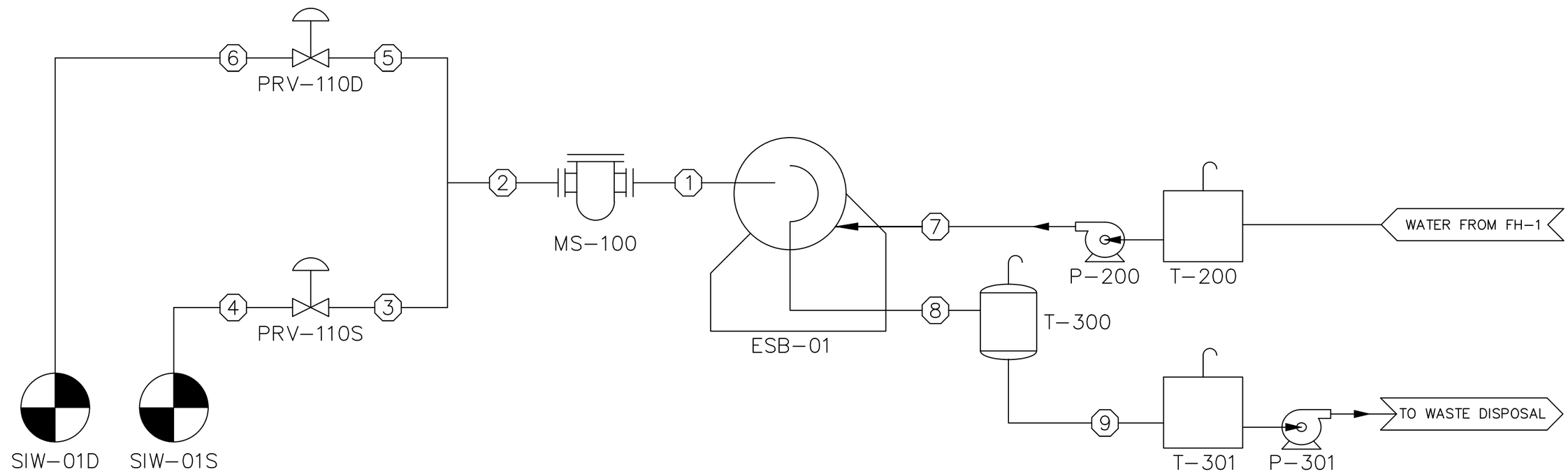

NO.	DESCRIPTION	FLOWRATE	PRESSURE	TEMPERATURE	QUALITY	ENTHALPY
1	STEAM	6,000 LB/HR	110 PSIG	344.22°F	98 %	1,174.16 BTU/LB
2	STEAM	6,000 LB/HR	110 PSIG	344.22°F	100 %	1,191.68 BTU/LB
3	STEAM	3,000 LB/HR	110 PSIG	344.22°F	100 %	1,191.68 BTU/LB
4	STEAM	3,000 LB/HR	35 PSIG	280.66°F	100 %	1,174.31 BTU/LB
5	STEAM	3,000 LB/HR	110 PSIG	344.22°F	100 %	1,191.68 BTU/LB
6	STEAM	3,000 LB/HR	45 PSIG	292.42°F	100 %	1,177.92 BTU/LB
7	FEEDWATER	12.8 GPM	125 PSIG	60°F	0 %	28.46 BTU/LB
8	BLOWDOWN	5 GPM	110 PSIG	344.22°F	0 %	315.76 BTU/LB
9	BLOWDOWN	5 GPM	5 PSIG	227.15°F	0 %	195.48 BTU/LB

REV. 1	
DRW. RLM	8/17/15
CHKR. JE	8/17/15
R.E.D. –	
T.R. –	
APPD. –	
DRAWING APPROVALS	DATE

LPE

DATE

PROFESSIONAL SEAL

REV.	DATE	DESCRIPTION	DRAWN BY	DRAFT CHK	PROJ ENGR	LEAD ENGR	CONF CTRL/ NUCL SFTY	FAC MGR	E&TS MGR
1	8/17/15	AS BUILT FOR ESD FA1550	RLM	JE	CRE	CRE	–	–	–
0	5/30/14	ISSUED FOR CONSTRUCTION	JE	JE	CRE	CRE			

DRAWING REVISIONS

FLUOR. PADUCAH DEACTIVATION PROJECT
DOE Prime Contract #DE-DT0007774

U.S. DEPARTMENT OF ENERGY
DOE PORTSMOUTH/PADUCAH PROJECT OFFICE
PADUCAH GASEOUS DIFFUSION PLANT

LATA Environmental Services of Kentucky, LLC
managed for the DEPARTMENT OF ENERGY under U.S. GOVERNMENT contract DE-AC30-10CC40020 Paducah, Kentucky

ERM Environmental Resources Management
1218 3rd AVENUE, SEATTLE WASHINGTON
(425) 462-8591

DOE CONTRACT NO. DE-AC30-10CC40020

PROJECT NAME:
C-400 STEAM INJECTION TREATABILITY STUDY

TITLE:
TREATABILITY STUDY
PROCESS FLOW DIAGRAM

CAD FILE NAME	BUILDING	PLANT	CLASS
A059_PFD.DWG	C-400	PGDP	U

SCALE:	DRAWING NUMBER	REV
NOT TO SCALE	P7DC40000A059	1

D:\Users\rodneywiller\AppData\Local\Temp\Temp1_C-400 S I T STUDY.zip\ZIP FILE\A059_PFD_REV 1.dwg, Scale: 13.958571

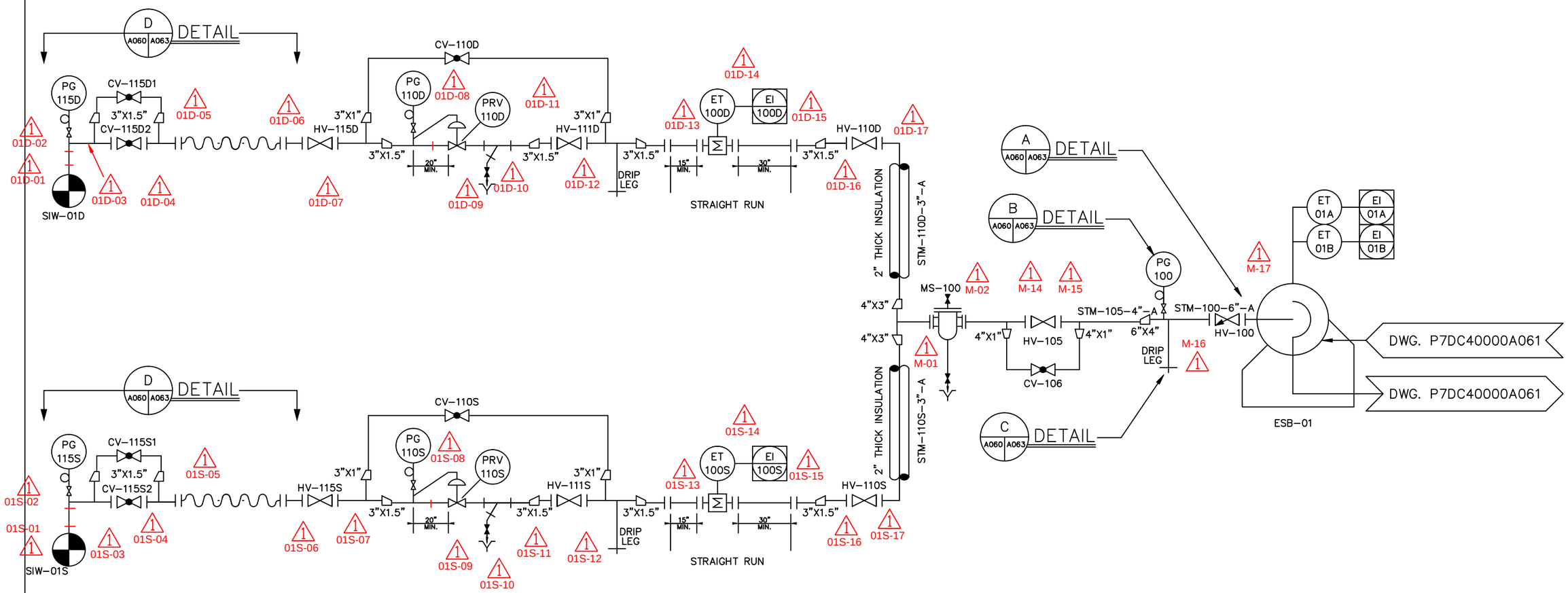

NOTES:

1. REFER TO DRAWING P7DC40000A058 FOR SYMBOLS, ABBREVIATIONS, GENERAL NOTES, AND OTHER REQUIREMENTS.
2. SLOPE STEAM PIPING AND HOSES $\frac{1}{8}$ INCH PER FOOT (MINIMUM) IN DIRECTION OF FLOW.
3. INSULATE STEAM PIPE, VALVES, AND FITTINGS AS PER SPECIFICATIONS.
4. REFER TO DRAWING P7DC40000A063 FOR PIPE SUPPORT, DRAIN, AND STEAM TRAP REQUIREMENTS AND DETAILS.
5. ALL TUBING SHALL BE 316 STAINLESS STEEL WITH APPROPRIATE STEAM RATED FITTINGS.
6. STEAM HOSES SHALL HAVE DOUBLE-BRAIDED STAINLESS STEEL JACKET AND CLASS 150 FLANGES. AT LEAST ONE FLANGE SHALL BE LAP JOINT TYPE.
7. VALVES SHALL BE ORIENTED FOR OPTIMUM ACCESSIBILITY WITHOUT NEED FOR LADDER.
8. INSTALL STEAM BOILER AND 24VDC INSTRUMENTS IN WEATHER PROOF ENCLOSURES.
9. INSTALL STRAINERS WITH BASKET IN HORIZONTAL PLANE.
10. INSTALL PIPE SUPPORTS EACH SIDE OF HOSES, REGULATORS, AND AT LEAST EVERY 10 FEET FROM STEAM BOILER.
11. INSTALL APPROPRIATELY SIZED REDUCERS BASED ON SELECTED METER, PRESSURE REGULATOR, AND VALVE FLOW COEFFICIENTS.

DRAWING APPROVALS	DATE
REV. 1	
DRW. RLM	8/17/15
CHKR. JE	8/17/15
R.E.D. –	
T.R. –	
APPD. –	

LPE

DATE

PROFESSIONAL SEAL

REV.	DATE	DESCRIPTION	DRAWN BY	DRAFT CHK	PROJ ENGR	LEAD ENGR	CONF CTRL/ NUCL SFTY	FAC MGR	EXTS MGR
1	8/17/15	AS BUILT FOR ESD FA1550	RLM	JE	CRE	CRE	–	–	–
0	5/30/14	ISSUED FOR CONSTRUCTION	JE	JE	CRE	CRE			

DRAWING REVISIONS

FLUOR. PADUCAH DEACTIVATION PROJECT
DOE Prime Contract #DE-DT0007774

U.S. DEPARTMENT OF ENERGY
DOE PORTSMOUTH/PADUCAH PROJECT OFFICE
PADUCAH GASEOUS DIFFUSION PLANT

LATA Environmental Services of Kentucky, LLC
managed for the DEPARTMENT OF ENERGY under U.S. GOVERNMENT contract DE-AC30-10CC40020 Paducah, Kentucky

ERM Environmental Resources Management
1218 3rd AVENUE, SEATTLE WASHINGTON
(425) 462-8591

DOE CONTRACT NO. DE-AC30-10CC40020

PROJECT NAME:
C-400 STEAM INJECTION TREATABILITY STUDY

TITLE:
TREATABILITY STUDY
PIPING & INSTRUMENTATION DIAGRAM
SHEET 1

CAD FILE NAME	BUILDING	PLANT	CLASS
A060_P&ID SH1.DWG	C-400	PGDP	U

SCALE:	DRAWING NUMBER	REV
NOT TO SCALE	P7DC40000A060	1

H:\DWG\H15\LATA\ZIP FILE – this is it – I THINK THE LATEST 9-3-15\A060_P&ID SH1_REV 1.dwg

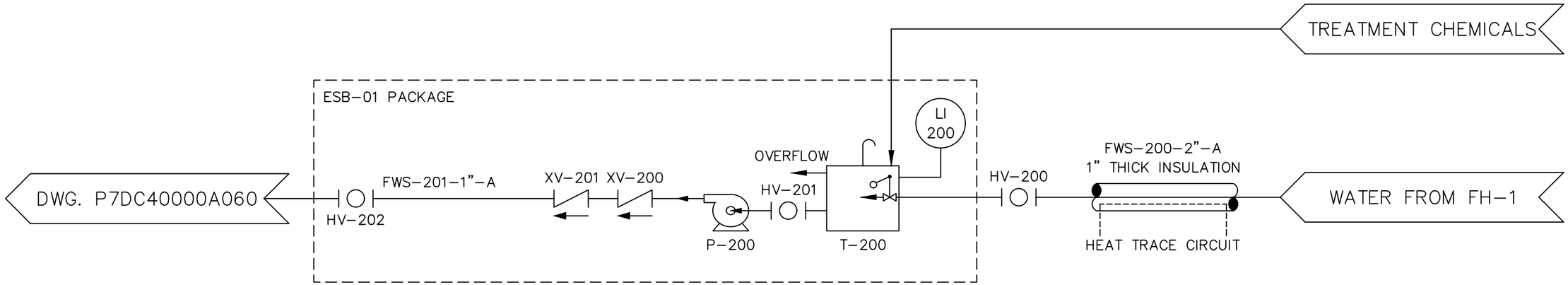

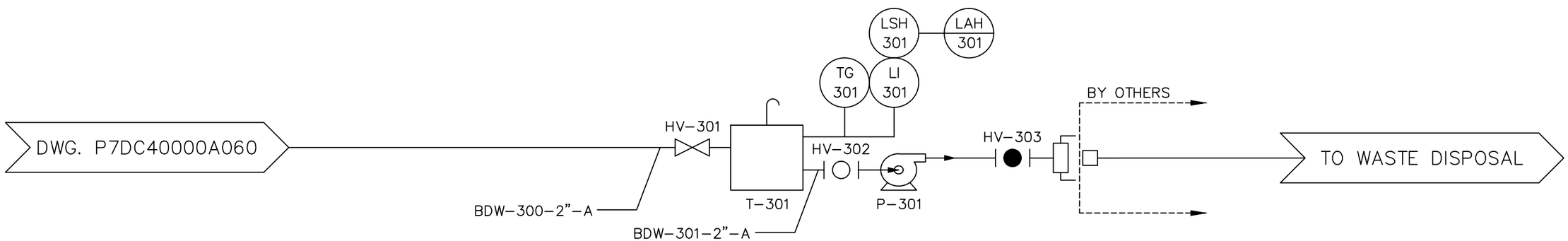

NOTES:

1. REFER TO DRAWING P7DC40000A058 FOR SYMBOLS, ABBREVIATIONS, GENERAL NOTES, AND OTHER REQUIREMENTS.
2. INSULATE PIPING, VALVES, AND TANKS AS PER SPECIFICATIONS.
3. INSTALL INSULATION AND HEAT TRACE CABLES ON PIPING AND VALVES BETWEEN T-300 AND P-301. POWER HEAT TRACE CABLES FROM LC1.
4. INSTALL PIPE SUPPORTS AT LEAST EVERY 10 FEET FROM STEAM BOILER. REFER TO DRAWING P7DC40000A063 FOR DETAILS.
5. VALVES SHALL BE ORIENTED FOR OPTIMUM ACCESSIBILITY WITHOUT NEED FOR LADDER.
6. CONNECT FEEDWATER INTO EXISTING WATER LINE FROM FIRE HYDRANT NO. 1. REFER TO DRAWING P7DC40000A063 FOR DETAILS.
7. STORE BLOWDOWN IN TANK T-301 FOR FUTURE DISPOSAL (BY OTHERS).
8. FOR TANK T-301, PROVIDE HIGH LEVEL FLOAT WITH LOCAL ALARM (LSH-301/LAH-301) BY HYDROMATIC MODEL Q-ALERT XT, OR EQUAL. FLOAT SHALL BE RATED FOR 250°F.

REV. 1	
DRW. RLM	8/17/15
CHKR. JE	8/17/15
R.E.D. –	
T.R. –	
APPD. –	
DRAWING APPROVALS	DATE

LPE

DATE

PROFESSIONAL SEAL

REV.	DATE	DESCRIPTION	DRAWN BY	DRAFT CHK	PRELI ENGR	LEAD ENGR	CONF CTRL/ NUCL SFTY	FAC MGR	ELTS MGR
1	8/17/15	AS BUILT FOR ESD FA1550	RLM	JE	CRE	CRE	–	–	–
0	5/30/14	ISSUED FOR CONSTRUCTION	JE	JE	CRE	CRE			

DRAWING REVISIONS

FLUOR. PADUCAH DEACTIVATION PROJECT
DOE Prime Contract #DE-DT0007774

U.S. DEPARTMENT OF ENERGY
DOE PORTSMOUTH/PADUCAH PROJECT OFFICE
PADUCAH GASEOUS DIFFUSION PLANT

LATA Environmental Services of Kentucky, LLC
managed for the DEPARTMENT OF ENERGY under U.S. GOVERNMENT contract DE-AC30-10CC40020 Paducah, Kentucky

Environmental Resources Management
1218 3rd AVENUE, SEATTLE WASHINGTON
(425) 462-8591

DOE CONTRACT NO. DE-AC30-10CC40020

PROJECT NAME:
C-400 STEAM INJECTION TREATABILITY STUDY

TITLE:
TREATABILITY STUDY
PIPING & INSTRUMENTATION DIAGRAM
SHEET 2

CAD FILE NAME	BUILDING	PLANT	CLASS
A061_P&ID SH2.DWG	C-400	PGDP	U

SCALE:	DRAWING NUMBER	REV
NOT TO SCALE	P7DC40000A061	1

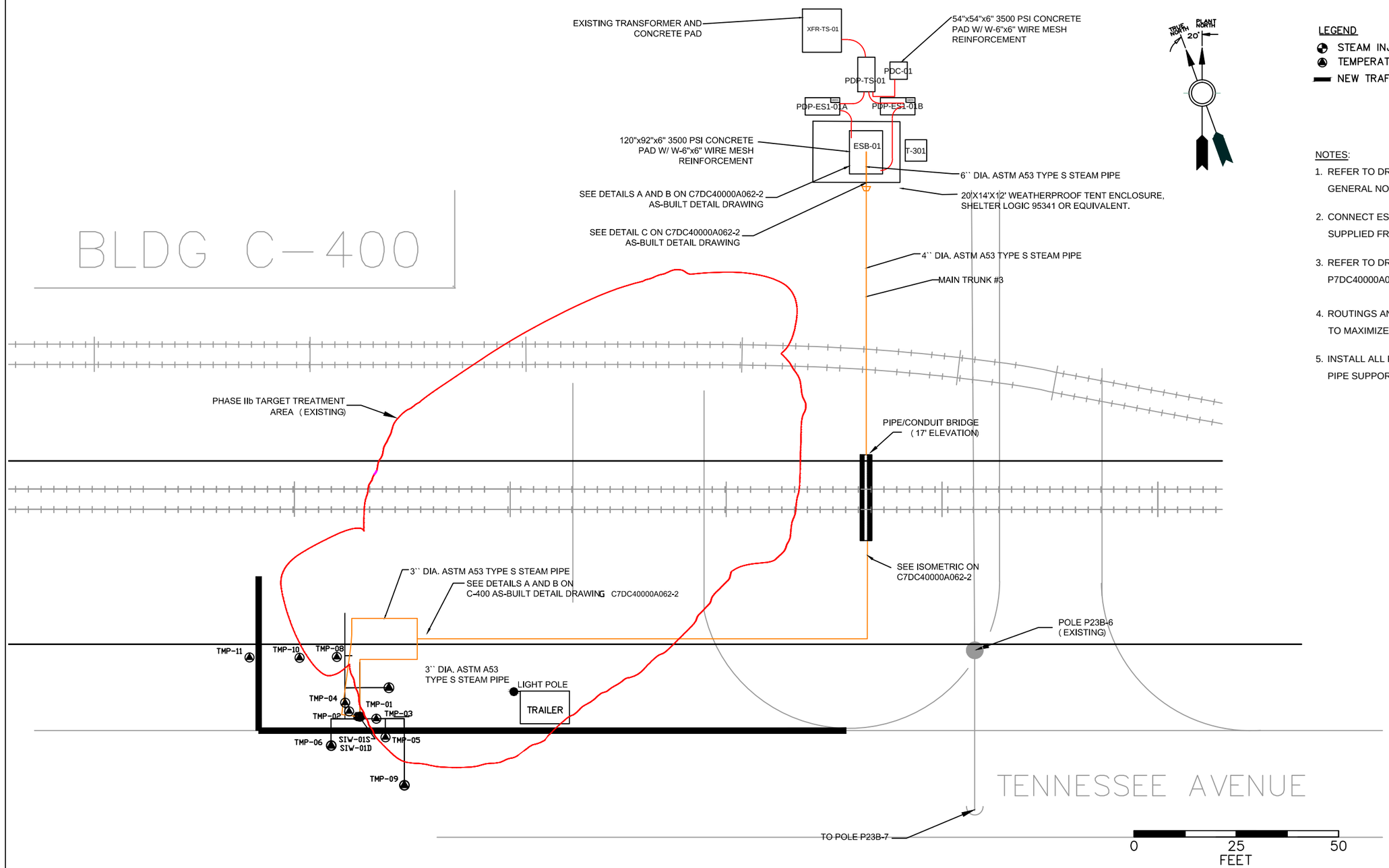

LEGEND

- STEAM INJECTION WELLS
- TEMPERATURE MONITORING POINT
- NEW TRAFFIC BARRIERS

NOTES:

1. REFER TO DRAWING P7DC40000A058 FOR SYMBOLS, ABBREVIATIONS, GENERAL NOTES, AND OTHER REQUIREMENTS.
2. CONNECT ESB-01 FEEDWATER TO EXISTING PROCESS WATER LINE SUPPLIED FROM FIRE HYDRANT FH-1.
3. REFER TO DRAWINGS P7DC40000A060, P7DC40000 A061, P7DC40000A062-1, P7DC40000A062-2, A063 FOR PIPING DETAILS.
4. ROUTINGS AND LOCATIONS ARE DIAGRAMMATIC. INSTALL AS NEEDED TO MAXIMIZE EFFICIENCY.
5. INSTALL ALL PIPING NORTH OF JERSEY BARRIERS ABOVEGROUND ON PIPE SUPPORTS.

REV. 1	
DRW. RLM	8/17/15
CHKR. JE	8/17/15
R.E.D. –	
T.R. –	
APPD. –	
DRAWING APPROVALS	DATE

LPE

DATE

PROFESSIONAL SEAL

REV.	DATE	DESCRIPTION	DRAWN BY	DRAFT CHK	PROJ ENGR	LEAD ENGR	CONF CTRL/ NUCL SFTY	FAC MGR	E&TS MGR
1	8/17/15	AS BUILT FOR ESD FA1550	RLM	JE	CRE	CRE	–	–	–	–
0	5/30/14	ISSUED FOR CONSTRUCTION	JE	JE	CRE	CRE			

DRAWING REVISIONS

FLUOR.

PADUCAH DEACTIVATION PROJECT
DOE Prime Contract #DE-DT0007774

U.S. DEPARTMENT OF ENERGY
DOE PORTSMOUTH/PADUCAH PROJECT OFFICE
PADUCAH GASEOUS DIFFUSION PLANT

LATA Environmental Services of Kentucky, LLC
managed for the DEPARTMENT OF ENERGY under U.S. GOVERNMENT contract DE-AC30-10CC40020 Paducah, Kentucky

ERM
Environmental Resources Management
1218 3rd AVENUE, SEATTLE WASHINGTON
(425) 462-8591

DOE CONTRACT NO. DE-AC30-10CC40020

PROJECT NAME:
C-400 STEAM INJECTION TREATABILITY STUDY

TITLE:
TREATABILITY STUDY PIPING PLAN

CAD FILE NAME	BUILDING	PLANT	CLASS
C:\Users\rodney.miller\AppData\Local\Temp\Temp1_C-400 S I T STUDY.zip\ZIP FILE\C7DC40000A062 REV1 - Treatability Study Piping Plan.dwg	C-400	PGDP	U

SCALE:	DRAWING NUMBER	REV
AS SHOWN	C7DC40000A062	1

C:\Users\rodney.miller\AppData\Local\Temp\Temp1_C-400 S I T STUDY.zip\ZIP FILE\C7DC40000A062 REV1 - Treatability Study Piping Plan.dwg, Scale: 1:25

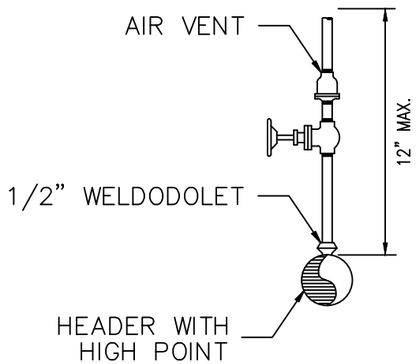

A A060 A063 NTS DETAIL – VENT (TYP.)

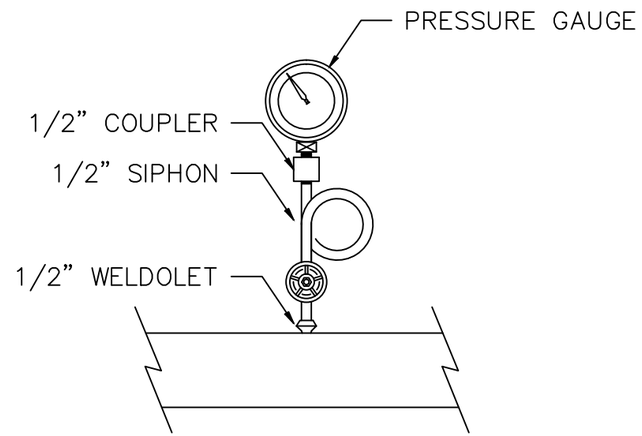

B A060 A063 NTS DETAIL – PRESSURE GAUGE (TYP.)

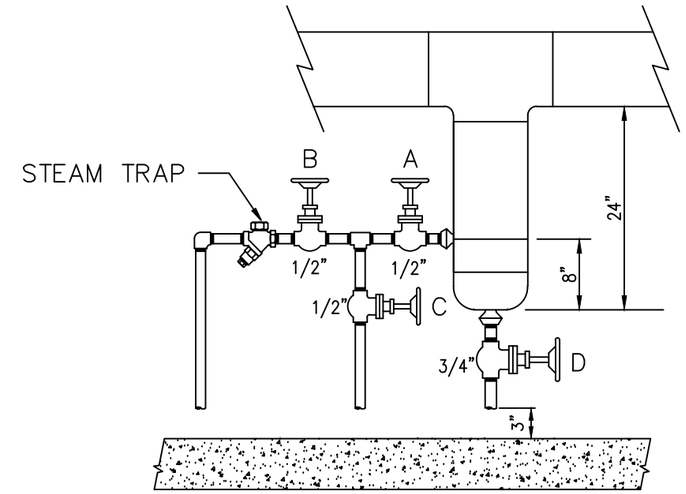

C A060 A063 NTS DETAIL – DRIP LEG (TYP.)

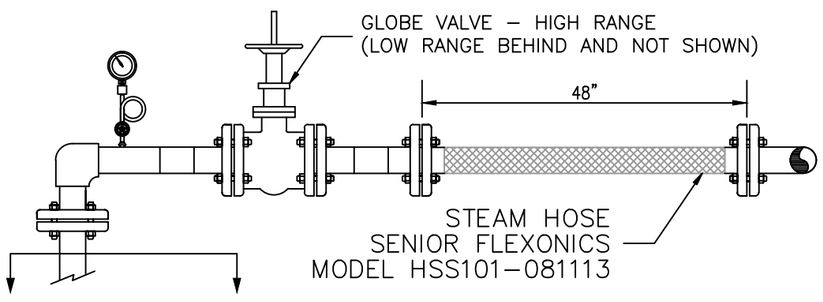

D A060 A063 NTS DETAIL – WELLHEAD (TYP.)

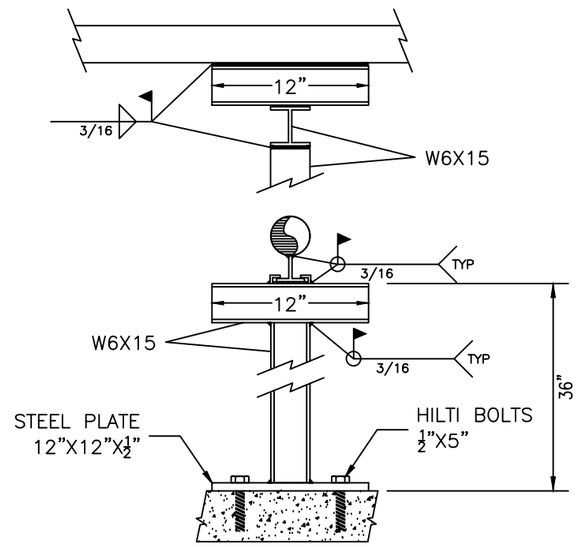

E A060 A063 NTS DETAIL – STEAM PIPE SUPPORT (TYP.)

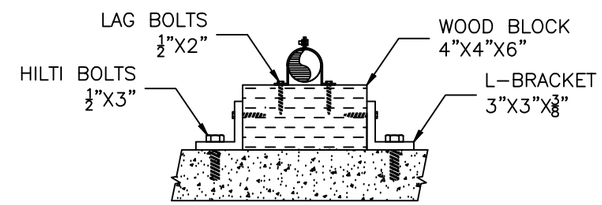

F A061 A063 NTS DETAIL – WATER PIPE SUPPORT (TYP.)

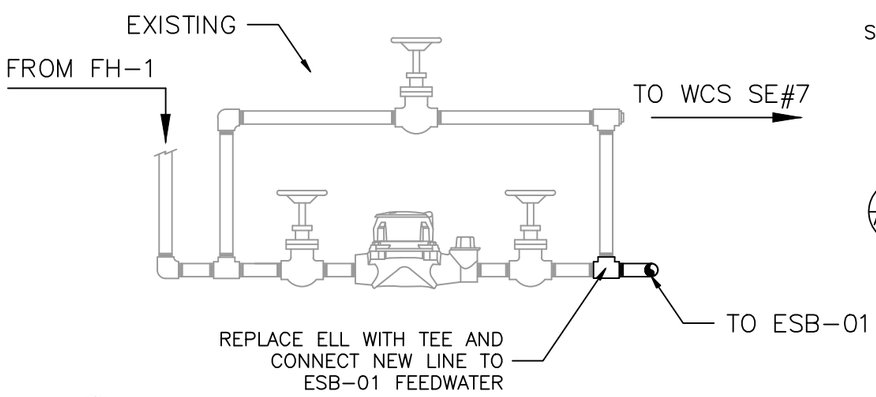

G A060 A063 NTS DETAIL – FEEDWATER CONNECTION

REV. 1	
DRW. RLM	8/17/15
CHKR. JE	8/17/15
R.E.D. –	
T.R. –	
APPD. –	
DRAWING APPROVALS	DATE

LPE

DATE

PROFESSIONAL SEAL

REV.	DATE	DESCRIPTION	DRAWN BY	DRAFT CHK	PROJ ENGR	LEAD ENGR	CONF CTRL/ NUCL SFTY	FAC MGR	ES/TS MGR
1	8/17/15	AS BUILT FOR ESD FA1550	RLM	JE	CRE	CRE	–	–	–
0	5/30/14	ISSUED FOR CONSTRUCTION	JE	JE	CRE	CRE			

DRAWING REVISIONS

FLUOR. PADUCAH DEACTIVATION PROJECT
DOE Prime Contract #DE-DT0007774

U.S. DEPARTMENT OF ENERGY
DOE PORTSMOUTH/PADUCAH PROJECT OFFICE
PADUCAH GASEOUS DIFFUSION PLANT

LATA Environmental Services of Kentucky, LLC
managed for the DEPARTMENT OF ENERGY under U.S. GOVERNMENT contract DE-AC30-10CC40020
Paducah, Kentucky

Environmental Resources Management
1218 3rd AVENUE, SEATTLE WASHINGTON
(425) 462-8591

DOE CONTRACT NO. DE-AC30-10CC40020

PROJECT NAME:
C-400 STEAM INJECTION TREATABILITY STUDY

TITLE:
TREATABILITY STUDY
WELLHEAD AND PIPING DETAILS

CAD FILE NAME	BUILDING	PLANT	CLASS
A063_WELLHEAD & PIPING DETAILS.DWG	C-400	PGDP	U

SCALE:	DRAWING NUMBER	REV
NOT TO SCALE	P7DC40000A063	1

\APPDATA\LOCAL\TEMP\TEMP1_C-400 S I T STUDY.ZIP\ZIP FILE\A063_WELLHEAD & PIPING DETAILS_REV 1.DWG

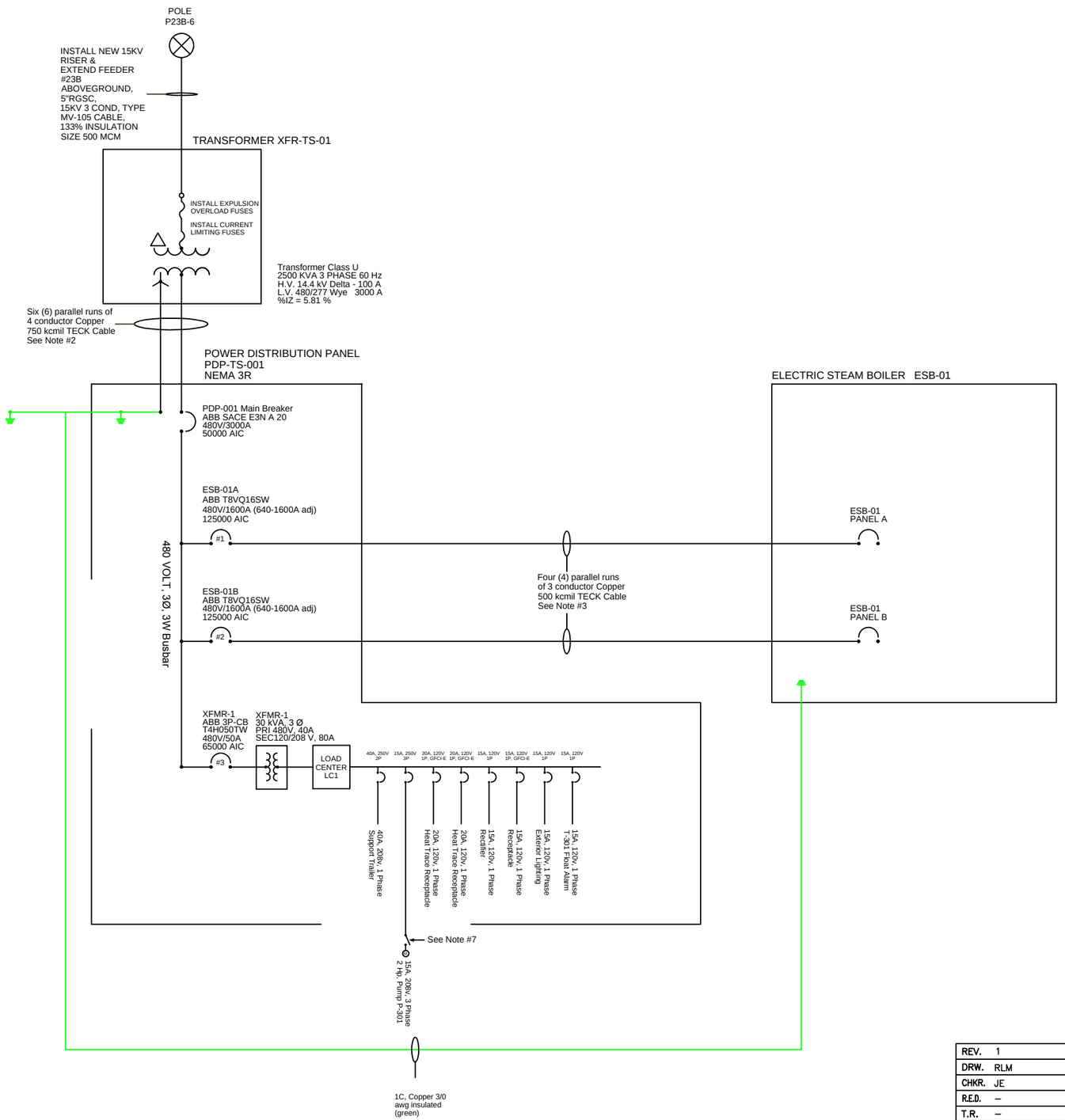

General Notes

1. Construction and material shall comply with Kentucky building code, CSA/UL, National Electrical Code and applicable local and state codes.

2. Cable from Transformer XFR-TS-01 to PDP-TS-001: Six (6) parallel 4C-750 kcmil Cu conductor TECK cables. (4C) HL TECK: Four Conductor (COPPER), XLP Insulated, PVC Inner Jacket, Aluminum or Steel Armor, PVC Outer Jacket, Bare Copper Ground Conductor, 600 Volts. USA Wire & Cable Inc. Part# 750-04WGTECK90 or equivalent

3. Cable from PDP-TS-001 Breaker #1 & #2 to Electric Steam Boiler ESB-01 Panel A & B: Four (4) parallel 3C-500 kcmil Copper conductor TECK cables. (3C) HL TECK: Three Conductor (COPPER), XLP Insulated, PVC Inner Jacket, Aluminum or Steel Armor, PVC Outer Jacket, Bare Copper Ground Conductor, 600 Volts. USA Wire & Cable Inc. Part# 500-03WGTECK90 or equivalent.

4. XFMR-1 and Load Center LC1 are internal to PDP-TS-001. Support Trailer, P-301, Heat Trace, Control and Lighting circuits are to be connected to breakers in LC1.

5. All electrical equipment will be grounded in accordance with NEC section 250.

6. Electric Steam Boiler to be Lattner Model #2080HS-480-32, 2080KW Cabinet Style Steam Boiler or equivalent. Boiler has two (2) power connection panels each with a 1600 amp Breaker c/w GFI and shunt trip. Each power panel has a load of 1250 amps @ 480vac.

7. Install Manual Motor Switch within 6 feet of Pump Motor P-301. Square D Part # 2510KW2H or equivalent.

REV.	1	
DRW.	RLM	8/17/15
CHKR.	JE	8/17/15
R.E.D.	–	
T.R.	–	
APPD.	–	
DRAWING APPROVALS		DATE

LPE

REV.	DATE	DESCRIPTION	DRAWN BY	DRAFT CHK	PROJ ENGR	LEAD ENGR	CONF CTRL/ NUCL SFTY	FAC MGR	EXTS MGR
1	8/17/15	AS BUILT FOR ESD FA1550	RLM	JE	CRE	CRE	–	–	–
0	5/30/14	ISSUED FOR CONSTRUCTION	DP	ER	–	ER			

DATE
PROFESSIONAL SEAL
DRAWING REVISIONS

FLUOR. PADUCAH DEACTIVATION PROJECT
DOE Prime Contract #DE-DT0007774

U.S. DEPARTMENT OF ENERGY
DOE PORTSMOUTH/PADUCAH PROJECT OFFICE
PADUCAH GASEOUS DIFFUSION PLANT

LATA Environmental Services of Kentucky, LLC
managed for the DEPARTMENT OF ENERGY under U.S. GOVERNMENT contract DE-AC30-10CC40020
Paducah, Kentucky

Environmental Resources Management
1218 3rd AVENUE, SEATTLE WASHINGTON
(425) 462-8591

McMillan-McGee Corp
CALGARY, ALBERTA CANADA
(403) 279-7948
FAX (403) 272-7201

DOE CONTRACT NO. DE-AC30-10CC40020

PROJECT NAME:
C-400 STEAM INJECTION TREATABILITY STUDY

TITLE:
TREATABILITY STUDY ELECTRICAL POWER ONE-LINE DIAGRAM

CAD FILE NAME	BUILDING	PLANT	CLASS
A046_One-Line.dwg	C-400	PGDP	U

SCALE:	DRAWING NUMBER	REV
Not to Scale	E7DC40000A046	1

C:\Users\rodney.miller\AppData\Local\Temp\Temp1_C-400 S I T STUDY.zip\ZIP FILE\A046_ONE-LINE_REV 1.dwg, Scale: 1:43.127

NOTES:

1. ALL EQUIPMENT ANCHOR BOLTS AND LOCATIONS TO BE PER MANUFACTURER RECOMMENDATIONS.
2. MAINTAIN A 5'-0" MINIMUM CLEARANCE AROUND SWITCHGEAR AND TRANSFORMER FROM ALL OTHER EQUIPMENT AND BUILDINGS.
3. ALL EMBEDDED STEEL AND WIRE MESH TO BE BONDED TO THE GROUNDING SYSTEM IN ACCORDANCE WITH NEC 250-81.
4. ALL BELOW GRADE GROUNDING CONNECTIONS SHALL BE MADE USING EXOTHERMIC WELDING TECHNIQUES.
5. TOPS OF DRIVEN GROUNDING ELECTRODES TO BE NO LESS THAN 1'-0" BELOW FINISHED GRADE SURFACE.
6. GROUND CABLES TO BE TERMINATED INSIDE EQUIPMENT PER MANUFACTURER'S INSTRUCTIONS.
7. GROUNDING SHALL COMPLY FULLY WITH ALL APPLICABLE REQUIREMENTS OF NFPA 70.
8. SEE DRAWING POWER ONE-LINE DIAGRAM FOR CABLE SIZES. SPECIAL CONSIDERATION TO BE TAKEN IN EQUIPMENT ORIENTATION DUE TO THE LARGE BEND RADIUS OF ARMORED CABLE & CONDUITS.

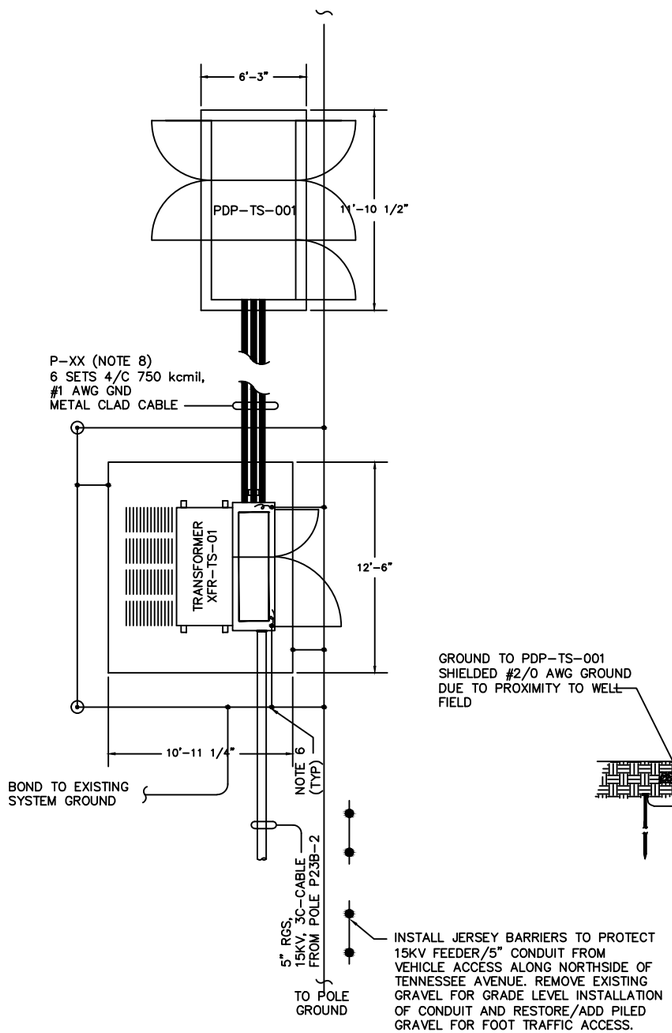

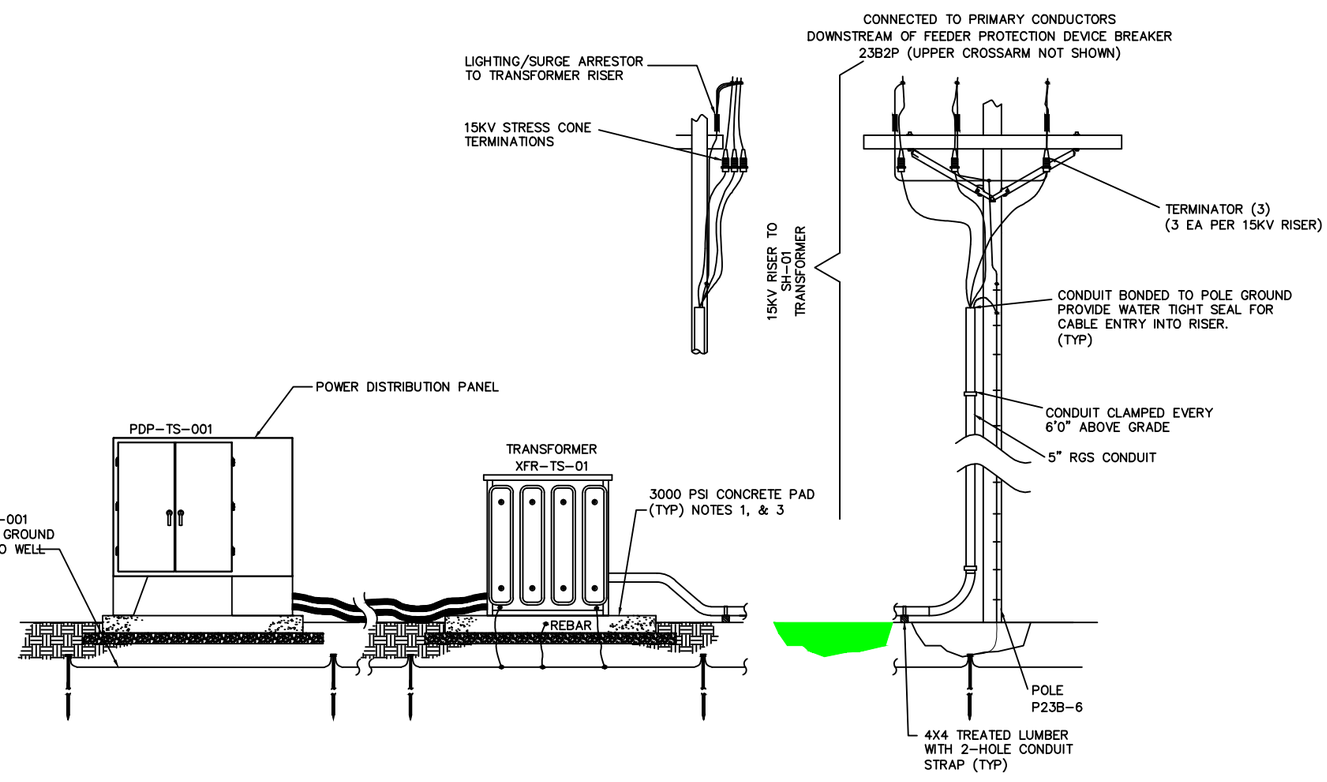

1	8/17/15	AS BUILT FOR ESD FA1550	RLM	JE	CRE	CRE	-	-	-	-		
0	5/30/14	ISSUED FOR CONSTRUCTION	DP	ER	-	ER						
REV.	DATE	DESCRIPTION	DRAWN BY	DRAFT CHK	PROJ ENGR	LEAD ENGR	CONF CTRL/ NUCL SFTY	FAC MGR	EXTS MGR			
		DRAWING REVISIONS										

LPE

DATE

PROFESSIONAL SEAL

REV. 1	
DRW. RLM	8/17/15
CHKR. JE	8/17/15
R.E.D. -	
T.R. -	
APPD. -	
DRAWING APPROVALS	DATE

FLUOR. PADUCAH DEACTIVATION PROJECT
DOE Prime Contract #DE-DT0007774

U.S. DEPARTMENT OF ENERGY
DOE PORTSMOUTH/PADUCAH PROJECT OFFICE
PADUCAH GASEOUS DIFFUSION PLANT

LATA Environmental Services of Kentucky, LLC
managed for the DEPARTMENT OF ENERGY under U.S. GOVERNMENT contract DE-AC30-10CC40020 Paducah, Kentucky

ERM Environmental Resources Management
1218 3rd AVENUE, SEATTLE WASHINGTON
(425) 462-8591

McMillan-McGee Corp
CALGARY, ALBERTA CANADA
(403) 279-7948
FAX (403) 272-7201

DOE CONTRACT NO. DE-AC30-10CC40020

PROJECT NAME:
C-400 STEAM INJECTION TREATABILITY STUDY

TITLE:
TREATABILITY STUDY ELECTRICAL
POLE, TRANSFORMER & PDP DETAILS

CAD FILE NAME	BUILDING	PLANT	CLASS
A047_Electrical Details.dwg	C-400	PGDP	U

SCALE:	DRAWING NUMBER	REV
Not to Scale	E7DC40000A047	1

C:\Users\rodney.miller\AppData\Local\Temp\Temp1_C-400 S I T STUDY.zip\ZIP FILE\A047_ELECTRICAL DETAILS_REV 1.dwg, Scale: 1:107.8153

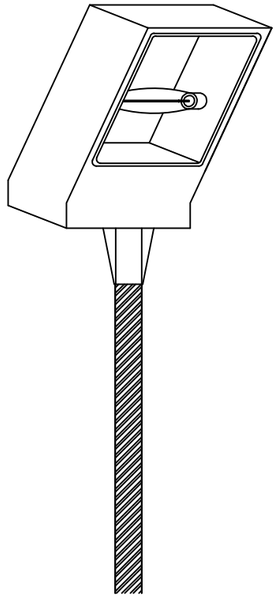

2"ø RGS POLE BRACKET
NTS

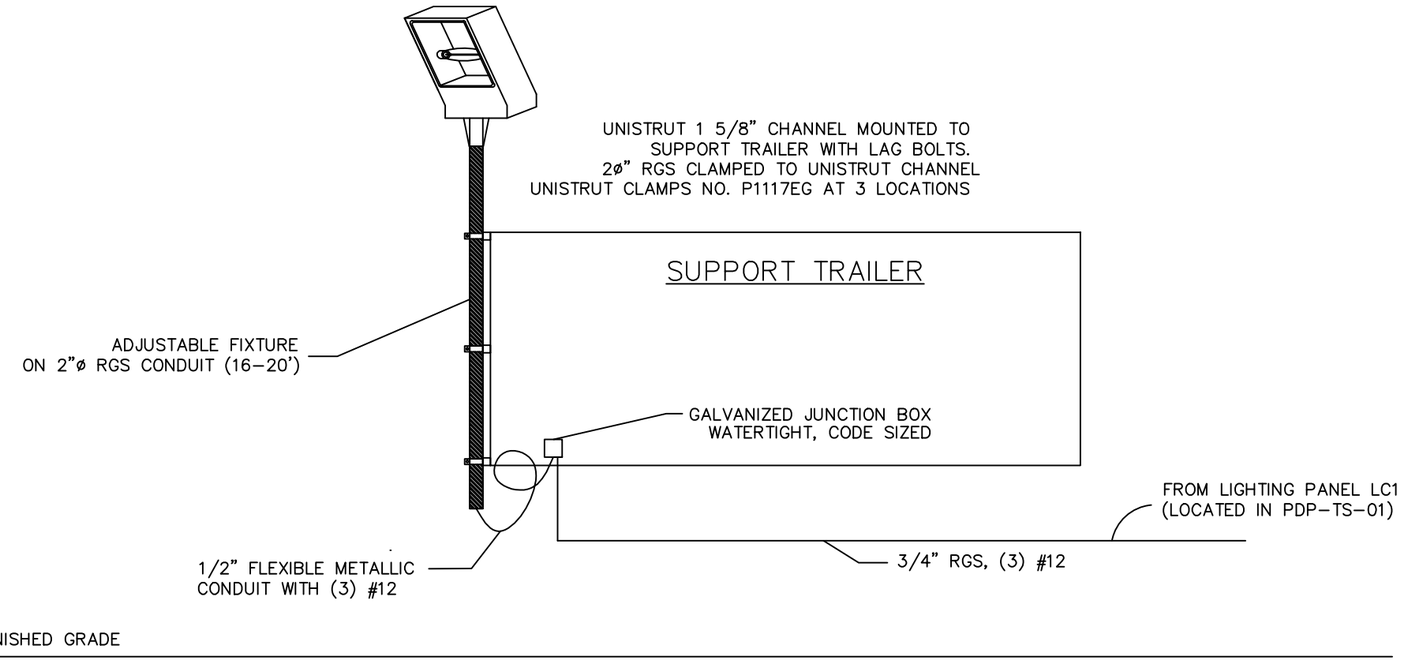

INSTALLATION OF FLOODLIGHT
NTS

NOTES:

1. 2"ø RGS TO EXTEND ONE FOOT BELOW AND 6 FEET ABOVE SUPPORT TRAILER
2. CONSIDER FIXTURE TO WEIGH 44 POUNDS INCLUDING LAMP.
3. LIGHT FIXTURE ATTACHED WITH SLIP FITTING THAT SLIDES OVER 2" RGS CONDUIT

LIGHTING LAYOUT
NTS

1. LIGHT FIXTURE TO BE CONTROLLED BY PHOTO CELL INTEGRAL TO LIGHT.
   LIGHT FIXTURE FED FROM LIGHTING PANEL LC1 LOCATED IN PDP–TS–001

LIGHTING FIXTURE SCHEDULE

SYMBOL	LAMPS TYPE	LAMPS NO./FIXT.	TOTAL FIXT. WATTS	VOLTS	MANUFACTURER & CATALOG NO.	REMARKS
	MH	1/400W	465	120	GE FIXTURE NO. CFMX40E1A3MBLCKK 400W, MH, BLACK, INTEGRAL PE, 2 3/8" SLIPFITTER MOUNT	

REV. 1	
DRW. RLM	8/17/15
CHKR. JE	8/17/15
R.E.D. –	
T.R. –	
APPD. –	
DRAWING APPROVALS	DATE

LPE

DATE

PROFESSIONAL SEAL

REV.	DATE	DESCRIPTION	DRAWN BY	DRAFT CHK	PROJ ENGR	LEAD ENGR	CONF CTRL/ NUCL SFTY	FAC MGR	ELTS MGR
1	8/17/15	AS BUILT FOR ESD FA1550	RLM	JE	CRE	CRE	–	–	–
0	5/30/14	ISSUED FOR CONSTRUCTION	DP	ER	–	ER			

DRAWING REVISIONS

FLUOR. PADUCAH DEACTIVATION PROJECT
DOE Prime Contract #DE-DT0007774

U.S. DEPARTMENT OF ENERGY
DOE PORTSMOUTH/PADUCAH PROJECT OFFICE
PADUCAH GASEOUS DIFFUSION PLANT

LATA Environmental Services of Kentucky, LLC
managed for the DEPARTMENT OF ENERGY under U.S. GOVERNMENT contract DE-AC30-10CC40020 Paducah, Kentucky

Environmental Resources Management
1218 3rd AVENUE, SEATTLE WASHINGTON
(425) 462-8591

McMillan–McGee Corp
CALGARY, ALBERTA CANADA
(403) 279–7948
FAX (403) 272–7201

DOE CONTRACT NO. DE-AC30-10CC40020

PROJECT NAME:
C-400 STEAM INJECTION TREATABILITY STUDY

TITLE:
TREATABILITY STUDY
LIGHTING DETAILS

CAD FILE NAME	BUILDING	PLANT	CLASS
A048_Lighting Details.dwg	C-400	PGDP	U

SCALE:	DRAWING NUMBER	REV
Not to Scale	E7DC40000A048	1

C:\Users\rodney.miller\AppData\Local\Temp\Temp1_C-400 S I T STUDY.zip\ZIP FILE\A048_LIGHTING DETAILS_REV 1.dwg, Scale: 1:107.8161

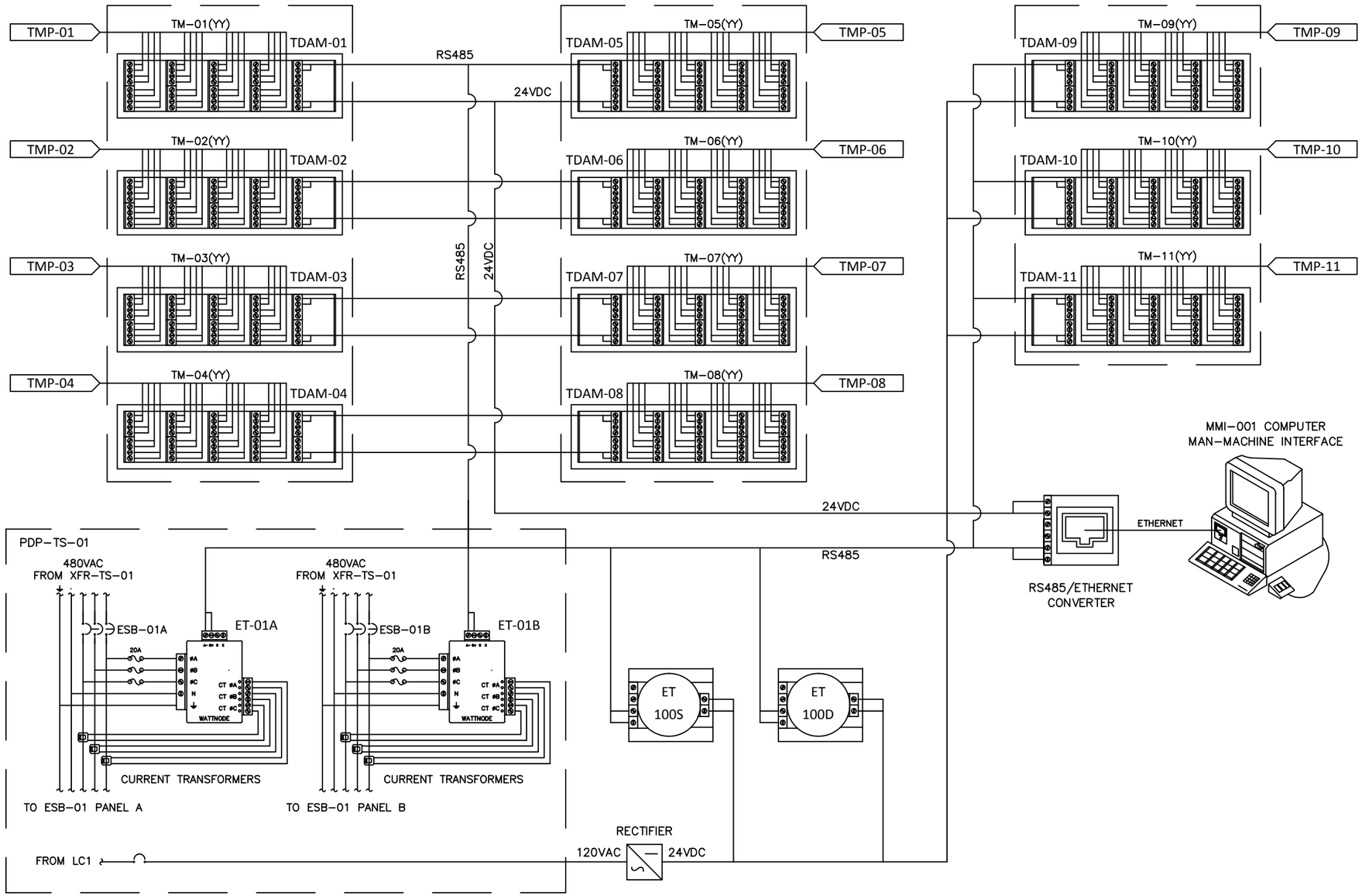

NOTES:

1. TEMPERATURE DATA ACQUISITION MODULES CAN BE 8 CHANNEL OR 16 CHANNEL AND SHALL BE INSTALLED IN OUTDOOR RATED ENCLOSURES AT OR NEAR THE WELLHEADS.
2. INSTALL ADDITIONAL 8 CHANNEL TDAMs AS NEEDED FOR TMPs WITH MORE THAN 16 TEMPERATURE MONITORS.
3. RS485 AND 24VDC CONFIGURATIONS ARE DIAGRAMMATIC. ROUTING SHALL BE DETERMINED IN FIELD BASED ON FINAL EQUIPMENT LOCATIONS AND SUPPLIER REQUIREMENTS.
4. MULTIPLE CONDUCTORS ARE DEPICTED AS SINGLE LINES.
5. TEMPERATURE MONITOR WIRING CAN BE COMBINED IN CONDUITS TO OPTIMIZE EFFICIENCY.
6. LOCATE RECTIFIER, CONVERTER, AND MMI-001 IN SUPPORT TRAILER.
7. ET-100S AND ET-100D SHALL PROVIDE THE FOLLOWING:

VOLUME FLOW	MASS FLOW
ENERGY FLOW	VELOCITY
TEMPERATURE	PRESSURE
DENSITY	VISCOSITY
ENTHALPY	

8. ET-01A AND ET-01B SHALL PROVIDE THE FOLLOWING:

CURRENT	VOLTAGE
WATTS	WATT-HOURS

REV.	1	
DRW.	RLM	8/17/15
CHKR.	JE	8/17/15
R.E.D.	–	
T.R.	–	
APPD.	–	
DRAWING APPROVALS		DATE

LPE

DATE

PROFESSIONAL SEAL

REV.	DATE	DESCRIPTION	DRAWN BY	DRAFT CHK	PROJ ENGR	LEAD ENGR	CONF CTRL/ NUCL SFTY	FAC MGR	ES&TS MGR
1	8/17/15	AS BUILT FOR ESD FA1550	RLM	JE	CRE	CRE	–	–	–	–
0	5/30/14	ISSUED FOR CONSTRUCTION	JE	JE	CRE	CRE				

DRAWING REVISIONS

FLUOR. PADUCAH DEACTIVATION PROJECT
DOE Prime Contract #DE-DT0007774

U.S. DEPARTMENT OF ENERGY
DOE PORTSMOUTH/PADUCAH PROJECT OFFICE
PADUCAH GASEOUS DIFFUSION PLANT

LATA Environmental Services of Kentucky, LLC
managed for the DEPARTMENT OF ENERGY under U.S. GOVERNMENT contract DE-AC30-10CC40020 Paducah, Kentucky

ERM
Environmental Resources Management
1218 3rd AVENUE, SEATTLE WASHINGTON
(425) 462-8591

DOE CONTRACT NO. DE-AC30-10CC40020

PROJECT NAME:
C-400 STEAM INJECTION TREATABILITY STUDY

TITLE:
TREATABILITY STUDY
COMMUNICATIONS DIAGRAM

CAD FILE NAME	BUILDING	PLANT	CLASS
A049_COMM DIAGRAM.DWG	C-400	PGDP	U

SCALE:	DRAWING NUMBER	REV
AS SHOWN	E7DC40000A049	1

C:\Users\rodney.miller\AppData\Local\Temp\Temp1_C-400 S I T STUDY.zip\ZIP FILES\A049_COMM DIAGRAM_REV 1.dwg Scale: 1:113.9243

Field Change Request (FCR) /Field Change Notice (FCN)

Does this change alter the form, fit, or function of the intended design? Yes ☒ No ☐

If "yes", proceed to complete for FCR. If "no", proceed to complete for FCN.

FCR/FCN Number: ~~FCR-400~~ FCR-PHC400-P019

Project Name: ~~Rat~~ C-400 Treatability Study

FCR/FCN Title: ~~Replace~~ New Power Panel

Documents Affected by this FCR/FCN

Document Number	Revision	Document Title
E7DC40000A027	0	Site Plan
E7DC40000A046	0	Electrical One line Diagram
E7DC40000A047	0	Electrical Pole, Transformer & PDP Details.

Description of Change:

Current Condition: New power panel is proposed as shown on Drawing A027.

Proposed Change: In order to use the existing transformer and PDP, larger circuit breakers are required for the electric steam boiler. Two new panels will be tied to the existing panel to add 2, 1600 amp breakers. Changes will be documented as red lines on the field drawings and electric test reports and captured in the as built drawings.

FCR/FCN Disposition:

Engineer (Signature)	Front Line Supervisor (Signature)	Date Signed
[signature]	[signature]	1/28/15

Following to be completed by E&TS:

FCR/FCN Approved:	FCR/FCN Incorporation Required:	Field change can be made prior to document change:
Yes ☑ No ☐	Yes ☑ No ☐	Yes ☑ No ☐

Engineer/SME (Signature & Date):	E&TS Manager (Signature & Date):	Facility Manager (Signature & Date):
C. Slusmeyer / 2-2-15	[signature] / 2/3-15	[signature] 2/3/15

Project Manager (Signature & Date): Required for FCRs	Nuclear Safety (Signature & Date):
[signature] 2/3/15	[signature] 2-3-15

Remarks:

Page __ of __

Field Change Request (FCR) /Field Change Notice (FCN)

Does this change alter the form, fit, or function of the intended design? Yes ☒ No ☐

If "yes", proceed to complete for FCR. If "no", proceed to complete for FCN.

FCR/FCN Number: ~~FCR-400~~ FCR-PHC400-P020

Project Name: C-400 Treatability Study

FCR/FCN Title: Electric Tie In Point

Documents Affected by this FCR/FCN

Document Number	Revision	Document Title
C7DC40000A027	0	SITE PLAN
E7DC40000A047	0	Electrical Pole, Transformer & PDP Details

Description of Change:

Current Condition: Electrical tie point is at Pole P23B-6. Power to transformer XFR-T3-01 comes directly from pole.

Proposed Change: Steam boiler will be moved to vicinity of F64-1 to use existing LATA owned, transformer and panels. Electric tie point to be moved to Pole P23B-2. New tie point will be documented by redline on field plans and captured on redline as built drawings.

FCR/FCN Disposition:

Engineer (Signature)	Front Line Supervisor (Signature)	Date Signed
[signature]	[signature]	1/28/15

Following to be completed by E&TS:

FCR/FCN Approved:	FCR/FCN Incorporation Required:	Field change can be made prior to document change:
Yes ☑ No ☐	Yes ☑ No ☐	Yes ☑ No ☐

Engineer/SME (Signature & Date):	E&TS Manager (Signature & Date):	Facility Manager (Signature & Date):
C. Slusmeyer 2-2-15	[signature] 2/3/15	[signature] 2/3/15

Project Manager (Signature & Date): Required for FCRs	Nuclear Safety (Signature & Date):
[signature] 2/3/15	[signature] 2-3-15

Remarks:

Page __ of __

Review the Identified Source Document for This Form Prior to Attempting Completion
Complete All Forms in Accordance with PAD-WC-0044

Field Change Request (FCR) /Field Change Notice (FCN)

Does this change alter the form, fit, or function of the intended design? Yes ☐ No ☒

If "yes", proceed to complete for FCR. If "no", proceed to complete for FCN.

FCR/FCN Number: ~~FCN-400-~~ ~~FCR-P~~ FCR-PHC400-P021

Project Name: C-400 Treatability Study

FCR/FCN Title: Move Steam Boiler ESB-1

Documents Affected by this FCR/FCN

Document Number	Revision	Document Title
GTDC40000A0271	0	Site Plan
PTDC40000A0062	0	Piping Plan

Description of Change:

Current Condition: Boiler ESB-1 is located south of railroad tracks and north of Tennessee.

Proposed Change: In order to reuse LATA owned transformer and PDP, ESB-1 will be relocated next to the transformer and PDP near FH-1 in order to reduce the size of 750 mil electric cable. Revised location will be shown on field drawings as a red line and captured on the as built drawings.

FCR/FCN Disposition:

Engineer (Signature)	Front Line Supervisor (Signature)	Date Signed
J T Robertson III	[signature]	1/28/15

Following to be completed by E&TS:

FCR/FCN Approved:	FCR/FCN Incorporation Required:	Field change can be made prior to document change:
Yes ☑ No ☐	Yes ☑ No ☐	Yes ☑ No ☐

Engineer/SME (Signature & Date):	E&TS Manager (Signature & Date):	Facility Manager (Signature & Date):
C. Slusmeyer / 2-2-15	[signature] / 2/3/15	[signature] 2/3/15

Project Manager (Signature & Date): Required for FCRs	Nuclear Safety (Signature & Date):
[signature] 2/3/15	[signature] 2-3-15

Remarks:

Page __ of __

Field Change Request (FCR) /Field Change Notice (FCN)

Does this change alter the form, fit, or function of the intended design? Yes ☒ No ☐

If "yes", proceed to complete for FCR. If "no", proceed to complete for FCN.

FCR/FCN Number: ~~FCR-400~~ - FCR-PHC400-P022

Project Name: C-400 Steam Treatability Study

FCR/FCN Title: Relocation of 3 TMP borings.

Documents Affected by this FCR/FCN

Document Number	Revision	Document Title
C7DC40000A027	0	Site Plan

Description of Change:

Current Condition: 3 proposed TMP locations are in close proximity to a high voltage, underground, electric line. Significant safety concerns were raised during site walk down.

Proposed changes: 3 boring locations will be moved along a radius from the SLW (steam) well to maintain the radial symmetry as designed. Relocation details shown on Figure (attached). Changes will be redlined on field drawing and captured on as-built plans.

FCR/FCN Disposition:

Engineer (Signature)	Front Line Supervisor (Signature)	Date Signed
[signature]	[signature]	1/28/15

Following to be completed by E&TS:

FCR/FCN Approved:	FCR/FCN Incorporation Required:	Field change can be made prior to document change:
Yes ☑ No ☐	Yes ☑ No ☐	Yes ☑ No ☐

Engineer/SME (Signature & Date):	E&TS Manager (Signature & Date):	Facility Manager (Signature & Date):
[signature] / 2/2/15	[signature] / 2/2/15	[signature] 2-3-15

Project Manager (Signature & Date): Required for FCRs	Nuclear Safety (Signature & Date):
[signature] 2/3/15	[signature] 2-3-15

Remarks:

Page __ of __

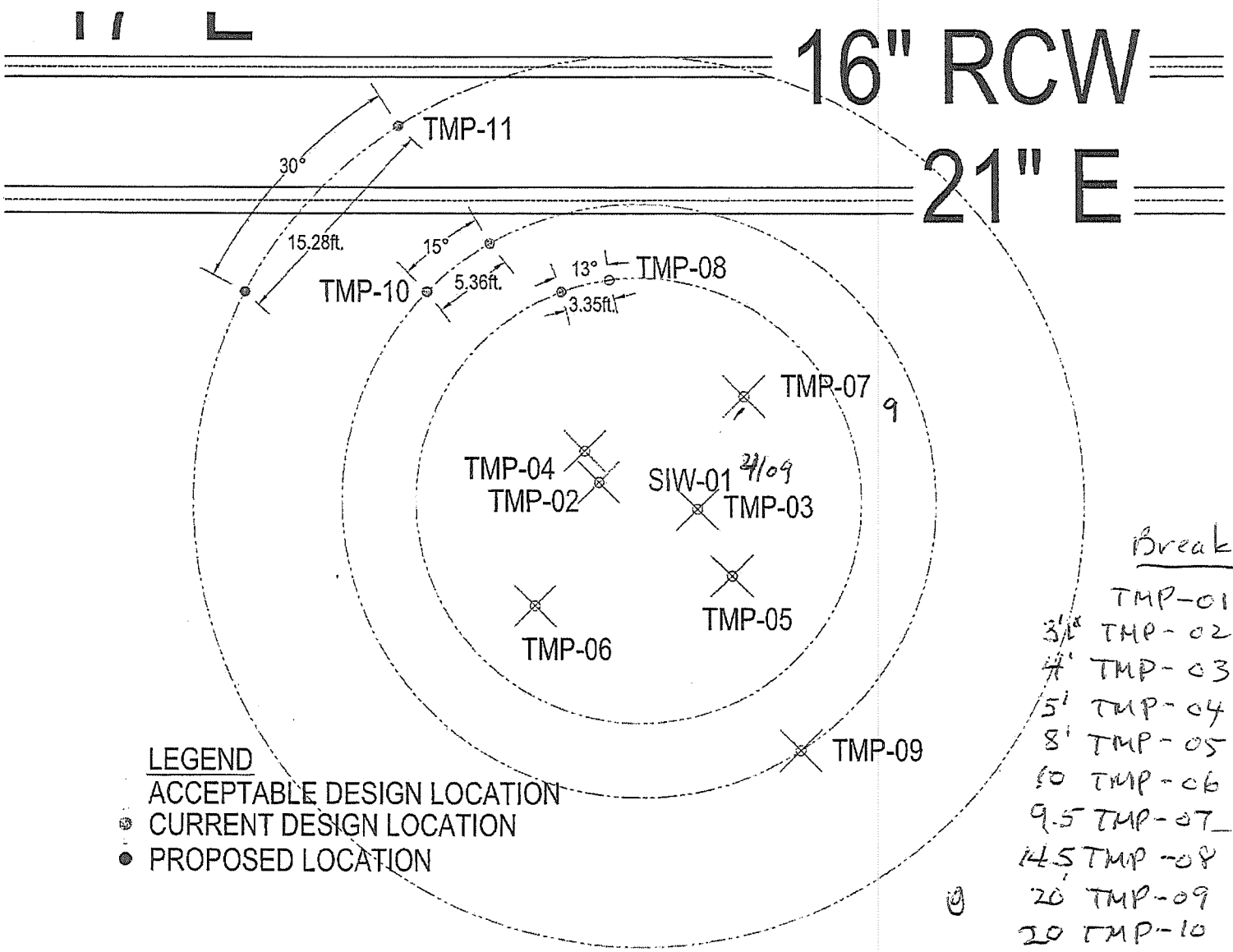

Breakthrough

	TMP-01	4/09	
3½'	TMP-02	4/10	1300
4'	TMP-03	4/10	1500
5'	TMP-04	4/11	0800
8'	TMP-05	4/11	2030
10	TMP-06		
9.5	TMP-07	4/11	2400
14.5	TMP-08		
20	TMP-09		
20	TMP-10		
30	TMP-11		

Field Change Request (FCR) /Field Change Notice (FCN)

Does this change alter the form, fit, or function of the intended design? Yes ☐ No ☐

If "yes", proceed to complete for FCR. If "no", proceed to complete for FCN.

FCR/FCN Number: FCR-PHC400-P023

Project Name: C-400 Treatability Study

FCR/FCN Title: Reuse existing pipe supports.

Documents Affected by this FCR/FCN

Document Number	Revision	Document Title
P7DC4000 A063	0	Wellhead and Piping Details
P7DC4000 A027	0	Site Plan

Description of Change:

Current conditions: Pipe supports shown on P7DC4000A063 are designed to support process piping runs.

Proposed Change: Existing LATA owned pipe supports are available for use. Existing pipe supports will be modified per the attached drawings to provide anchors and guides using Unistrut materials. No welding will be used during the modifications

FCR/FCN Disposition:

Engineer (Signature)	Front Line Supervisor (Signature)	Date Signed
[signature]	[signature]	1/30/15

Following to be completed by E&TS:

FCR/FCN Approved:	FCR/FCN Incorporation Required:	Field change can be made prior to document change:
Yes ☑ No ☐	Yes ☑ No ☐	Yes ☑ No ☐

Engineer/SME (Signature & Date):	E&TS Manager (Signature & Date):	Facility Manager (Signature & Date):
[signature] 02-26-15	[signature] 2/27/15	[signature] 2-26-15

Project Manager (Signature & Date): Required for FCRs	Nuclear Safety (Signature & Date):
[signature] 2/26/15	[signature] 2-26-15

Remarks:

The project has determined, based on experience with Phase IIa, that permanent anchorage of the pipe support is not necessary to support the piping. Therefore, the Unistrut pipe supports from Phase IIa will be re-used to support piping for the Treatability Study. The Unistrut pipe supports mounted to timbers and the structural steel utility bridge both have the capacity to support the gravity loads from the piping.

Review the Identified Source Document for This Form Prior to Attempting Completion
Complete All Forms in Accordance with PAD-WC-0044

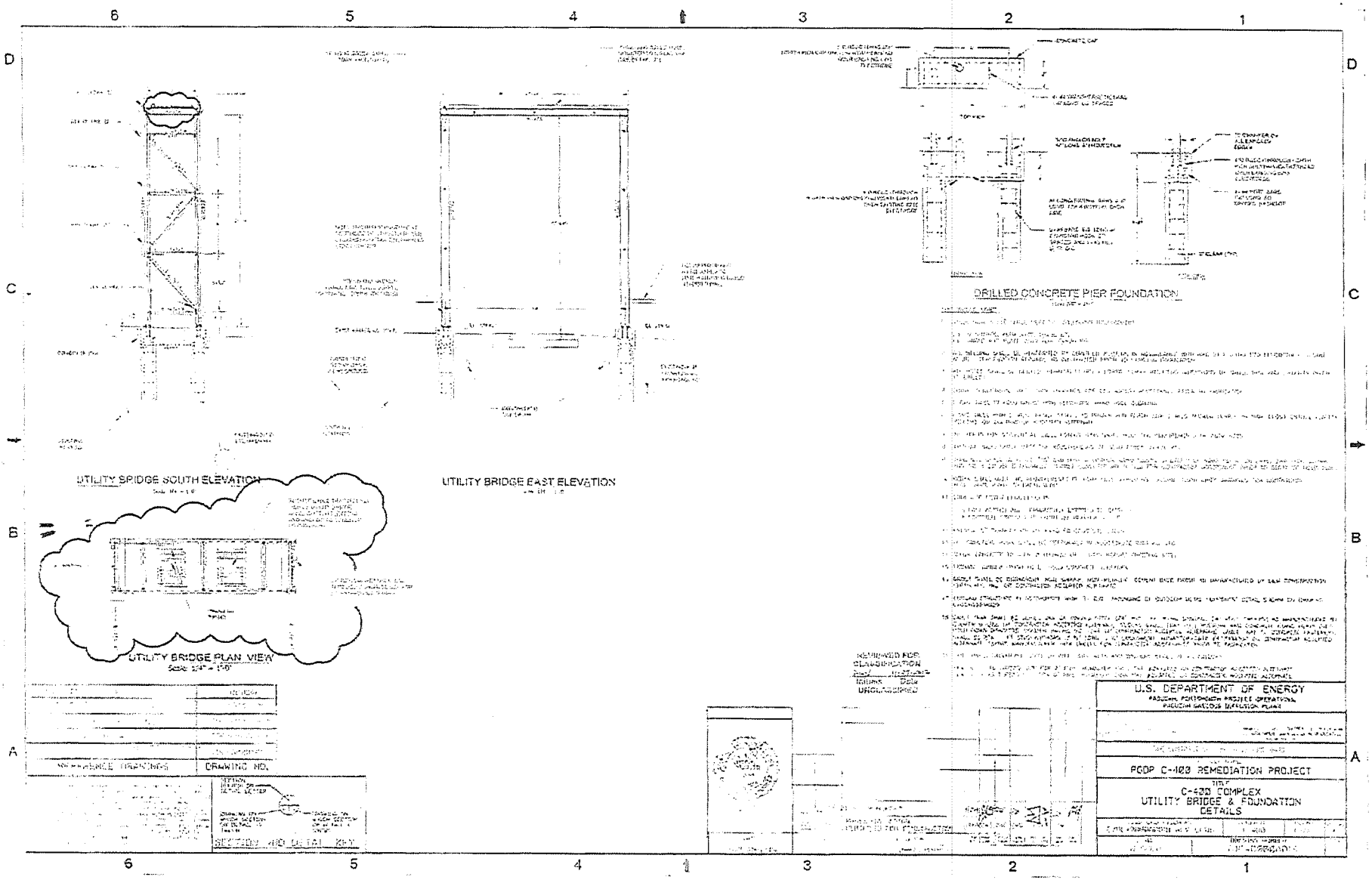
UTILITY BRIDGE SOUTH ELEVATION
UTILITY BRIDGE EAST ELEVATION
UTILITY BRIDGE PLAN VIEW
DRILLED CONCRETE PIER FOUNDATION
DRAWING NO.
U.S. DEPARTMENT OF ENERGY
PGDP C-400 REMEDIATION PROJECT
C-400 COMPLEX
UTILITY BRIDGE & FOUNDATION
DETAILS

Appendix C2
Conceptual Design Drawings

GENERAL EQUIPMENT

- COOLING TOWER
- PRESSURE VESSEL
- FLAT BOTTOM TANK w/CLOSED TOP
- CONE BOTTOM TANK
- SLANT PLATE CLARIFIER OR SEPARATOR
- AIR COMPRESSOR
- HEAT EXCHANGER FOR VAPOR SERVICE (FIN TUBE)
- ELECTRIC HEAT EXCHANGER
- HEAT EXCHANGER FOR LIQUID SERVICE (PLATE OR SHELL & TUBE)
- CENTRIFUGAL FAN
- CENTRIFUGAL PUMP
- ROTARY PUMP
- DIAPHRAGM PUMP
- VACUUM BLOWER
- FAN (FAN)
- CENTRIFUGAL PUMP (IN TANK) (M)
- ELECTRICAL COIL HEATER (STEAM)

GENERAL EQUIPMENT (cont'd)

- ROTARY, CENTRIFUGAL & WATER SEALED COMPRESSORS & VACUUM PUMPS
- SUMP PUMP (M)
- BLOWER SILENCER

GENERAL PIPING

- PRIMARY PROCESS FLOW
- SECONDARY PROCESS OR UTILITY FLOW
- CAM LOCK CONNECTION
- SOLIDS FLOW OR INTERMITTENT FLOW
- CONCENTRIC REDUCER OR INCREASER
- ECCENTRIC REDUCER OR INCREASER
- FLEXIBLE CONNECTION WITH QUICK CONNECTS
- FLEXIBLE HOSE WITH FLANGED ENDS
- FLANGED JOINT
- BLANK FLANGED
- DRAIN
- STEAM TRAP WITH INTEGRAL STRAINER (T)
- ATMOSPHERIC VENT
- PIPE SLOPE
- BASKET STRAINER, BAG FILTER, OR MOISTURE SEPARATOR
- INSULATION
- INSULATION & HEAT TRACE
- ENERGY METER (Σ)
- STRAINER
- STEAM BOILER

MISCELLANEOUS

DWG.# — LINE BREAK OR RESUMPTION POINT

VALVE NOTATION

CONTROL VALVE BODIES

OPEN		CLOSED
	GATE (GA)	
	BALL (BA)	
	BUTTERFLY (BF)	
	NEEDLE (NE)	
	CHECK (CK)	
	GLOBE (GL)	
	STOP CHECK (SC)	

DIAPHRAGM ACTUATED VALVES (TYPICAL)

HV — NO — FC

- NORMAL MODE *(SEE NOTE BELOW)*
- FAILURE MODE – FO,FC,FL,FI

NOTE:
FAIL POSITIONS ALL BODY STYLES
FO – FAIL OPEN
FC – FAIL CLOSED
FL – FAIL LOCKED/LAST POSITION
FI – FAIL INDETERMINATE
CSO – CAR SEAL/LOCK OPEN
CSC – CAR SEAL/LOCK CLOSED

NORMAL MODE IDENTIFICATION (I.E. NO. NC.) SHOULD ONLY BE USED FOR ON-OFF TYPE VALVES WHOSE POSITION CANNOT BE SHOWN BY SHADING THE VALVE BODY.

VALVE ACTUATORS

- HAND OR HAND WHEEL
- PNEUMATIC DIAPHRAGM
- SOLENOID (S)
- FLOAT

INSTRUMENT IDENTIFICATION

CT	CURRENT TRANSFORMER
EI	ENERGY INDICATION
ET	ENERGY TRANSMITTER
PG	PRESSURE GAUGE
PH	PHASE
KV	KILO VOLTAGE
VAC	VOLTS ALTERNATING CURRENT
VDC	VOLTS DIRECT CURRENT

GENERAL INSTRUMENTS

- INSTRUMENT FOR SINGLE MEASURED VARIABLE AND ANY NUMBER OF FUNCTIONS. INSTRUMENT IS FIELD MOUNTED
- INSTRUMENT IS MOUNTED IN FRONT OF LOCAL PANEL.
- CENTRAL PLC OR COMPUTER

GENERAL INSTRUMENTS (cont'd)

ALARM & CONTROL DESIGNATIONS

S/S, HH, H, L, LL — 0–100%

- HH – HI-HI ALARM (CONTROL ROOM)
- H – HI ALARM (CONTROL ROOM)
- L – LO ALARM (CONTROL ROOM)
- LL – LO-LO ALARM (CONTROL ROOM)
- S/S – START/STOP FROM CONTROL ROOM
- 0–100% – ADJUSTABLE RANGE OF OUTPUT
- HOA – HAND/OFF/AUTO
- OCA – OPEN/CLOSED/AUTO

- CONNECTION TO PROCESS OR INSTRUMENT INPUT
- ELECTRICAL SIGNAL OR INTERNAL SYSTEM LINK

TYPICAL CONNECTION ANY VARIABLE

- DIRECT CONNECTION PROCESS WITH ISOLATION VALVE

PRESSURE SENSOR CONNECTIONS

- DIRECT CONNECTED
- SIPHON TUBE

LINE NUMBER IDENTIFICATION

STM–100–4"–A

- MATERIAL SPECIFICATION
  - A – SCHEDULE 40 CARBON STEEL
  - B – SCHEDULE 40 PVC
  - C – SCHEDULE 40 GALVANIZED STEEL
  - T – STAINLESS STEEL TUBING
  - H – STAINLESS STEEL HOSE
- LINE SIZE
- SEQUENTIAL NUMBER
- FLOW TYPE
  - BDW – BLOWDOWN WATER
  - FWS – FEEDWATER
  - STM – STEAM

SELF-ACTIVATED PRESSURE DEVICES

- PRV — PRESSURE REDUCING REGULATOR WITH SENSOR TUBING ON DOWNSTREAM SIDE
- PSE — RUPTURE DISK OR SAFETY HEAD FOR PRESSURE RELIEF
- PSV — PRESSURE SAFETY VALVE

EQUIPMENT NUMBER IDENTIFICATION

ESB–100

- SEQUENCE NUMBER
- EQUIPMENT LETTER (SEE BELOW)

CV	CONTROL VALVE
ESB	ELECTRIC STEAM BOILER
FH	FIRE HYDRANT
HV	HAND VALVE
LC	LOAD CENTER
MMI	MAN-MACHINE INTERFACE
MS	MOISTURE SEPARATOR
P	POLE
PDP	POWER DISTRIBUTION PANEL
PRV	PRESSURE REGULATING VALVE
RGSC	RIGID GALVANIZED STEEL CONDUIT
SIW	STEAM INJECTION WELL
TDAM	TEMPERATURE DATA ACQUISITION MODULE
TM	TEMPERATURE MONITOR
TMP	TEMPERATURE MONITORING POINT
TS	TREATABILITY STUDY
XFR	TRANSFORMER

SECTION AND DETAIL KEY

- SECTION NUMBER OR DETAIL LETTER
- DRAWING ON WHICH SECTION OR DETAIL IS TAKEN
- DRAWING ON WHICH SECTION OR DETAIL IS SHOWN

PIPE INSPECTION AND TEST REQUIREMENTS

FLUID SERVICE	NON-CODE < 15 PSIG (FROM –20 TO 366°F)	ASME B31.3, CATEGORY D ≤ 150 PSIG (FROM –20 TO 366°F)	ASME B31.3, NORMAL > 15 PSIG AND NOT SPECIFIED CATEGORY D
CODE OF RECORD	NON-CODE	ASME B31.3 – 2012	ASME B31.3 – 2012
VISUAL INSPECTION REQUIRED	NONE	TO SATISFACTION OF CODE QUALIFIED EXAMINER	5% FABRICATION 100% LONGITUDINAL WELDS
RADIOGRAPHY REQUIRED	NONE	NONE	5% CIRCUMFERENTIAL AND MITER GROOVE WELDS OF EACH WELDER
TYPE OF LEAK TEST	NONE	PNEUMATIC/HYDROSTATIC	HYDROSTATIC
TEST PRESSURE	N/A	1.1/1.5 TIMES DESIGN PRESSURE	1.5 TIMES DESIGN PRESSURE
TEST DURATION	N/A	10 MIN. AT FULL TEST PRESSURE	10 MIN. AT FULL TEST PRESSURE
TEST PRESSURE TOLERANCE	N/A	+10%, –0%	+10%, –0%

GENERAL NOTES

1. DRAWINGS ARE DIAGRAMMATIC AND CANNOT SHOW ALL DETAILS. PROVIDE ALL FITTINGS AND COMPONENTS FOR COMPLETE SYSTEM.
2. COMPONENTS SHALL BE INSTALLED PER MANUFACTURER REQUIREMENTS.
3. COMPONENTS SHALL BE INSTALLED WITH SUFFICIENT CLEARANCE FOR OPERATION AND MAINTENANCE.
4. FLOW METERS, GAUGES, AND INSTRUMENTATION SHALL NOT BE SUBJECT TO PRESSURE TESTING UNLESS ALLOWED BY MANUFACTURER.
5. ALL CODED PIPING AND COMPONENTS SHALL BE QUALIFIED TO ASME B31.3 UNLESS OTHERWISE EXCLUDED.
6. STEAM HOSES SHALL HAVE DOUBLE-BRAIDED STAINLESS STEEL JACKET AND CLASS 150 L/J FLANGES.
7. WELL CASING AND SUBSURFACE COMPONENTS ARE NON-CODE.

LPE

DATE	REV.	DATE	DESCRIPTION	DRAWN BY	DRAFT CHK	PROJ ENGR	LEAD ENGR	CONF CTRL/ NUCL SFTY	FAC MGR	EXTS MGR
PROFESSIONAL SEAL			DRAWING REVISIONS							

U.S. DEPARTMENT OF ENERGY
DOE PORTSMOUTH/PADUCAH PROJECT OFFICE
PADUCAH GASEOUS DIFFUSION PLANT

FLUOR — PADUCAH DEACTIVATION PROJECT
DOE Prime Contract #DE-DT0007774

ERM — Environmental Resources Management

DOE CONTRACT NO. DT-000-7774

PROJECT NAME:
C-400 STEAM INJECTION TREATABILITY STUDY

TITLE:
TREATABILITY STUDY
SYMBOLS, IDENTIFICATION, ABBREVIATIONS, NOTES, AND REQUIREMENTS

CAD FILE NAME	BUILDING	PLANT	CLASS
H:\DWG\H15\LATA\M5E-FA1530-A01.dwg	C-400	PGDP	U

SCALE:	DRAWING NUMBER	REV
N. T. S.	M5E-FA1530-A01	FA1

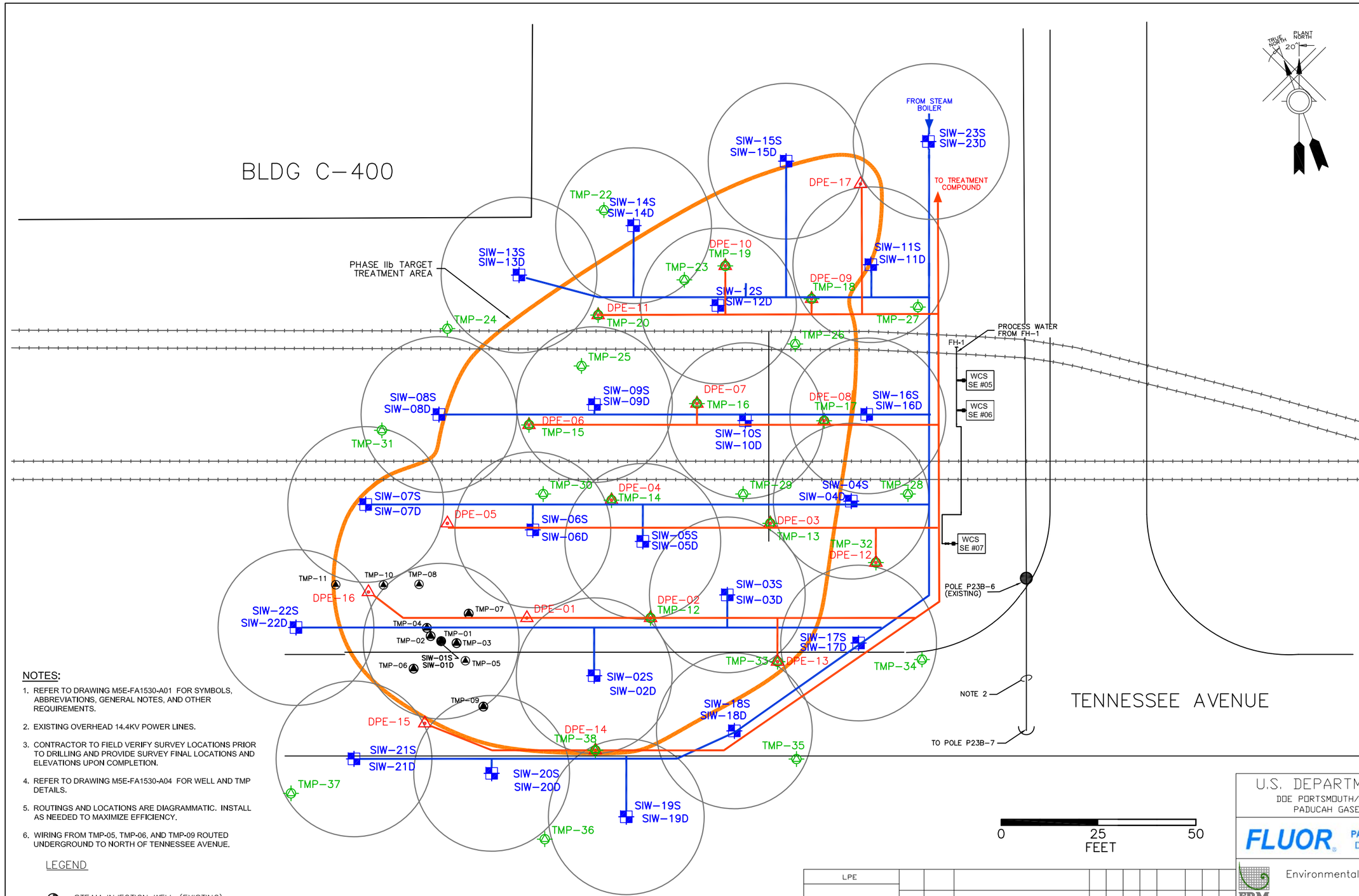

TAG NO.	EASTING	NORTHING
DPE-01	-4151.36	-1827.34
DPE-02	-4119.61	-1827.34
DPE-03	-4088.88	-1803.02
DPE-04	-4129.62	-1797.07
DPE-05	-4171.78	-1803.02
DPE-06	-4150.82	-1777.75
DPE-07	-4107.7	-1772.27
DPE-08	-4075.05	-1776.68
DPE-09	-4078.27	-1745.36
DPE-10	-4100.43	-1736.90
DPE-11	-4133.07	-1749.53
DPE-12	-4061.75	-1813.11
DPE-13	-4087.01	-1838.56
DPE-14	-4133.77	-1861.31
DPE-15	-4177.58	-1854.39
DPE-16	-4192.04	-1820.67
DPE-17	-4065.7	-1715.85
TMP-01	-4173.37	-1833.29
TMP-02	-4176.07	-1831.98
TMP-03	-4169.41	-1833.79
TMP-04	-4177.03	-1829.89
TMP-05	-4167.15	-1838.32
TMP-06	-4180.45	-1840.37
TMP-07	-4166.3	-1826.22
TMP-08	-4179.05	-1818.69
TMP-09	-4162.53	-1850.10
TMP-10	-4188.19	-1818.87
TMP-11	-4200.44	-1818.81
TMP-12	-4119.61	-1827.34
TMP-13	-4088.88	-1803.02
TMP-14	-4129.62	-1797.07
TMP-15	-4150.82	-1777.75
TMP-16	-4107.7	-1772.27
TMP-17	-4075.05	-1776.68
TMP-18	-4078.27	-1745.36
TMP-19	-4100.43	-1736.90
TMP-20	-4133.07	-1749.53
TMP-22	-4131.58	-1722.55
TMP-23	-4110.92	-1740.49
TMP-24	-4171.77	-1753.01
TMP-25	-4137.34	-1762.60
TMP-26	-4082.46	-1756.96
TMP-27	-4050.97	-1747.47
TMP-28	-4053.52	-1795.50
TMP-29	-4095.85	-1795.50
TMP-30	-4147.18	-1795.50
TMP-31	-4188.58	-1779.13
TMP-32	-4061.75	-1813.11
TMP-33	-4087.01	-1838.56
TMP-34	-4049.92	-1838.02
TMP-35	-4082.15	-1863.57
TMP-36	-4146.77	-1884.16
TMP-37	-4211.92	-1872.38
TMP-38	-4133.77	-1861.31
SIW-01S/SIW-01D	-4173.37	-1833.29
SIW-02S/SIW-02D	-4134.09	-1842.16
SIW-03S/SIW-03D	-4099.91	-1821.40
SIW-04S/SIW-04D	-4068.08	-1797.33
SIW-05S/SIW-05D	-4121.6	-1807.67
SIW-06S/SIW-06D	-4149.83	-1804.71
SIW-07S/SIW-07D	-4192.75	-1798.19
SIW-08S/SIW-08D	-4173.94	-1775.07
SIW-09S/SIW-09D	-4134.02	-1772.51
SIW-10S/SIW-10D	-4095.27	-1776.64
SIW-11S/SIW-11D	-4063.07	-1736.59
SIW-12S/SIW-12D	-4102.32	-1747.06
SIW-13S/SIW-13D	-4153.39	-1739.24
SIW-14S/SIW-14D	-4123.97	-1726.57
SIW-15S/SIW-15D	-4084.8	-1709.99
SIW-16S/SIW-16D	-4064.11	-1775.06
SIW-17S/SIW-17D	-4066.2	-1833.77
SIW-18S/SIW-18D	-4098.1	-1856.35
SIW-19S/ SIW-19D	-4125.84	-1878.40
SIW-20S/ SIW-20D	-4160.4	-1867.25
SIW-21S/ SIW-21D	-4195.75	-1863.53
SIW-22S/ SIW-22D	-4210.63	-1829.80
SIW-23S/ SIW-23D	-4048.27	-1704.95

NOTES:

1. REFER TO DRAWING M5E-FA1530-A01 FOR SYMBOLS, ABBREVIATIONS, GENERAL NOTES, AND OTHER REQUIREMENTS.
2. EXISTING OVERHEAD 14.4KV POWER LINES.
3. CONTRACTOR TO FIELD VERIFY SURVEY LOCATIONS PRIOR TO DRILLING AND PROVIDE SURVEY FINAL LOCATIONS AND ELEVATIONS UPON COMPLETION.
4. REFER TO DRAWING M5E-FA1530-A04 FOR WELL AND TMP DETAILS.
5. ROUTINGS AND LOCATIONS ARE DIAGRAMMATIC. INSTALL AS NEEDED TO MAXIMIZE EFFICIENCY.
6. WIRING FROM TMP-05, TMP-06, AND TMP-09 ROUTED UNDERGROUND TO NORTH OF TENNESSEE AVENUE.

LEGEND

- STEAM INJECTION WELL (EXISTING)
- TEMPERATURE MONITORING POINT (EXISTING)
- TEMPERATURE MONITORING POINT (PROPOSED)
- STEAM INJECTION WELL (PROPOSED)
- DUAL PHASE EXTRACTION WELL (PROPOSED)

0 25 50
FEET

LPE											
DATE	REV.	DATE	DESCRIPTION	DRAWN BY	DRAFT CHK	PROJ ENGR	LEAD ENGR	CONF CTRL/ NUCL SFTY	FAC MGR	E&TS MGR	
PROFESSIONAL SEAL			DRAWING REVISIONS								

U.S. DEPARTMENT OF ENERGY
DOE PORTSMOUTH/PADUCAH PROJECT OFFICE
PADUCAH GASEOUS DIFFUSION PLANT

FLUOR
PADUCAH DEACTIVATION PROJECT
DOE Prime Contract #DE-DT0007774

ERM Environmental Resources Management

DOE CONTRACT NO. DT-000-7774

PROJECT NAME:
C-400 STEAM INJECTION TREATABILITY STUDY

TITLE:
FULL SCALE CONCEPTUAL SITE PLAN

CAD FILE NAME	BUILDING	PLANT	CLASS
E:\ER\PROJECTS\C-400\Phase IIb Treat Sitb\Conceptual Design Drawings\M5E-FA1530-A02.dwg	C-400	PGDP	U

SCALE:	DRAWING NUMBER	REV
N. T. S.	M5E-FA1530-A02	FA1

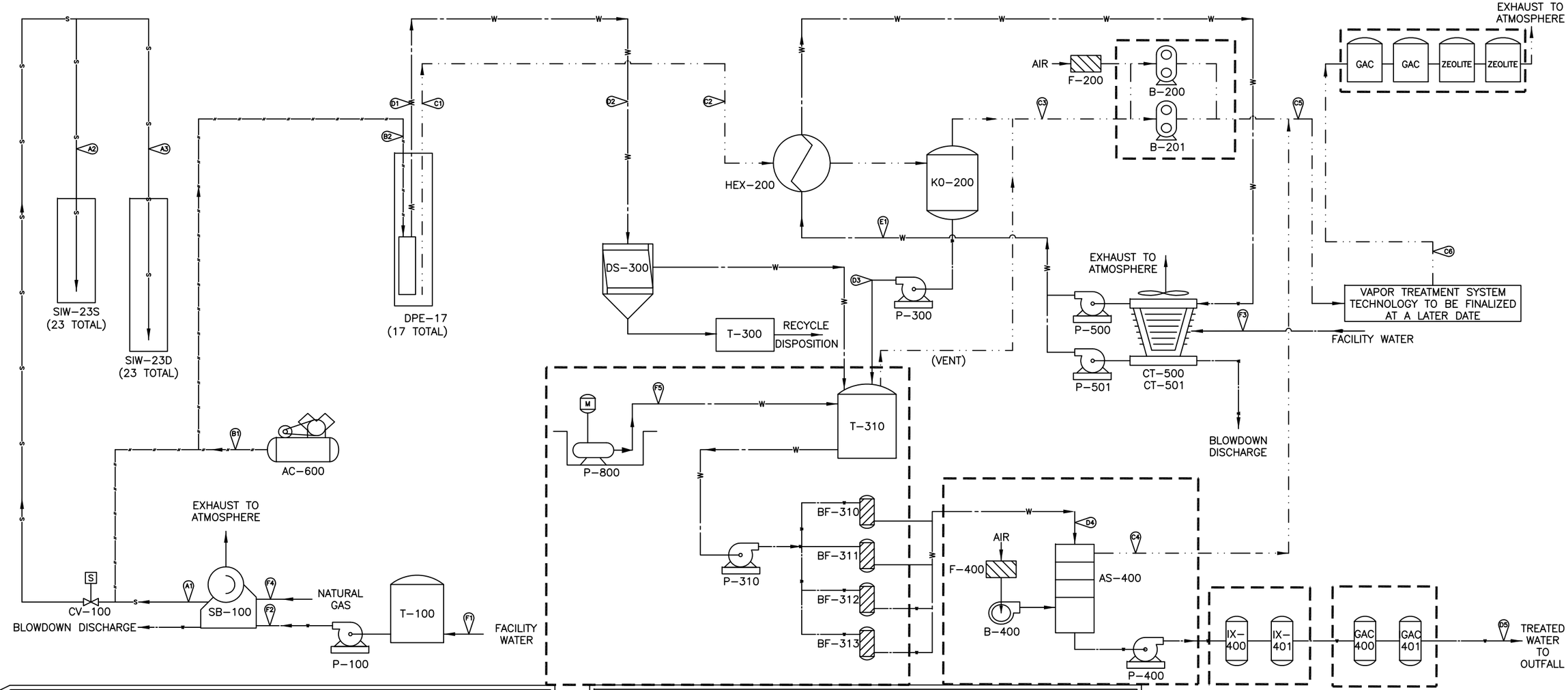

FLAG	SERVICE	MAX. FLOWRATE	MAX. PRESSURE	MAX. TEMPERATURE	MAX. RH	REMARKS
	STEAM SYSTEM					
A1	SATURATED STEAM (HP)	34,500 LB/HR	150 PSIG	366°F	100%	
A2	SATURATED STEAM (LP)	500 LB/HR	40 PSIG	287°F	100%	
A3	SATURATED STEAM (LP)	1,000 LB/HR	40 PSIG	287°F	100%	
	COMPRESSED AIR SYSTEM					
B1	COMPRESSED AIR (HP)	60 CFM	150 PSIG	---	100%	
B2	COMPRESSED AIR (LP)	3 CFM	70 PSIG	---	100%	
	VAPOR EXTRACTION SYSTEM					
C1	EXTRACTED VAPOR	CG=1,420 LB/HR; NCG=200 SCFM	−100" H_2O	210°F	100%	TCE 20,000 PPMV
C2	EXTRACTED VAPOR	CG=24,200 LB/HR; NCG=3,400 SCFM	−120" H_2O	210°F	100%	
C3	EXTRACTED VAPOR	3,400 SCFM	−140" H_2O	100°F	60%	
C4	CONTAMINATED AIR	800 SCFM	<1 PSIG	220°F	40%	
C5	CONTAMINATED VAPOR	4,200 SCFM	<1 PSIG	100°F	100%	
C6	TREATED VAPOR	4,200 SCFM	<1 PSIG	100°F	---	ΔTCE > 98%
	GROUNDWATER EXTRACTION AND CONDENSATE SYSTEMS					
D1	EXTRACTED GROUNDWATER	3 GPM	70 PSIG	140°F	---	
D2	EXTRACTED GROUNDWATER	60 GPM	70 PSIG	140°F	---	
D3	CONDENSED VAPOR	50 GPM	40 PSIG	100°F	---	TCE 20 PPM
D4	CONTAMINATED WATER	110 GPM	60 PSIG	120°F	---	
D5	TREATED WATER	120 GPM	60 PSIG	80°F	---	ΔTCE > 99.99%
	COOLING SYSTEMS					
E1	RECIRCULATION WATER (COOLING TOWER)	3,600 GPM	40 PSIG	80°F	---	
	SUPPORT SYSTEMS					
F1	FACILITY WATER (BOILER MAKEUP)	95 GPM	40 PSIG	60°F	---	
F2	BOILER FEEDWATER	75 GPM	150 PSIG	60°F	---	
F3	FACILITY WATER (COOLING TOWER MAKEUP)	60 GPM	40 PSIG	60°F	---	
F4	NATURAL GAS	700 CFM	50 PSIG	---	---	
F5	SUMP WATER	100 GPM	40 PSIG	100°F	---	

LEGEND

- VAPOR
- STEAM
- COMPRESSED AIR
- LIQUID
- FACILITY
- FROM EXISTING LATA SYSTEM

TCE = Trichloroethylene
PPM = Parts Per Million
PPMV = Parts Per Million by Volume
PSIG = Pounds Per Square Inch Gauge
SCFM = Standard Cubic Feet Per Minute
LB/HR = Pounds Per Hour
GPM = Gallons Per Minute
CFM = Cubic Feet Per Minute
RH = Relative Humidity
°F = Degrees Fahrenheit

HEX = Heat Exchanger
P = Pump
T = Tank
BF = Bag Filter
SB = Steam Boiler
AC = Air Compressor
CT = Cooling Tower
GAC = Granular Activated Carbon
CH = Chiller
CV = Control Valve

DPE = Dual Phase Extraction
KO = Knock-Out
F = Filter
B = Blower
AS = Air Stripper
SIW = Steam Injection Well
DS = DNAPL Set

U.S. DEPARTMENT OF ENERGY
DOE PORTSMOUTH/PADUCAH PROJECT OFFICE
PADUCAH GASEOUS DIFFUSION PLANT

FLUOR
PADUCAH DEACTIVATION PROJECT
DOE Prime Contract #DE-DT0007774

ERM Environmental Resources Management

DOE CONTRACT NO. DT-000-7774

PROJECT NAME:
C-400 STEAM INJECTION TREATABILITY STUDY

TITLE:
PROCESS FLOW DIAGRAM
(USING EXISTING LATA SYSTEM EQUIPMENT)

CAD FILE NAME	BUILDING	PLANT	CLASS
E:\DP\PROJECTS\C-400\Phase IB Treat Study\Conceptual Design Drawings\MSE-FA1530-A03.dwg	C-400	PGDP	U

SCALE:	DRAWING NUMBER	REV
N. T. S.	M5E-FA1530-A03	FA1

LPE

DATE	REV.	DATE	DESCRIPTION	DRAWN BY	DRAFT CHK	PROJ ENGR	LEAD ENGR	CONF CTRL/ NUCL SFTY	FAC MGR	E&TS MGR
PROFESSIONAL SEAL			DRAWING REVISIONS							

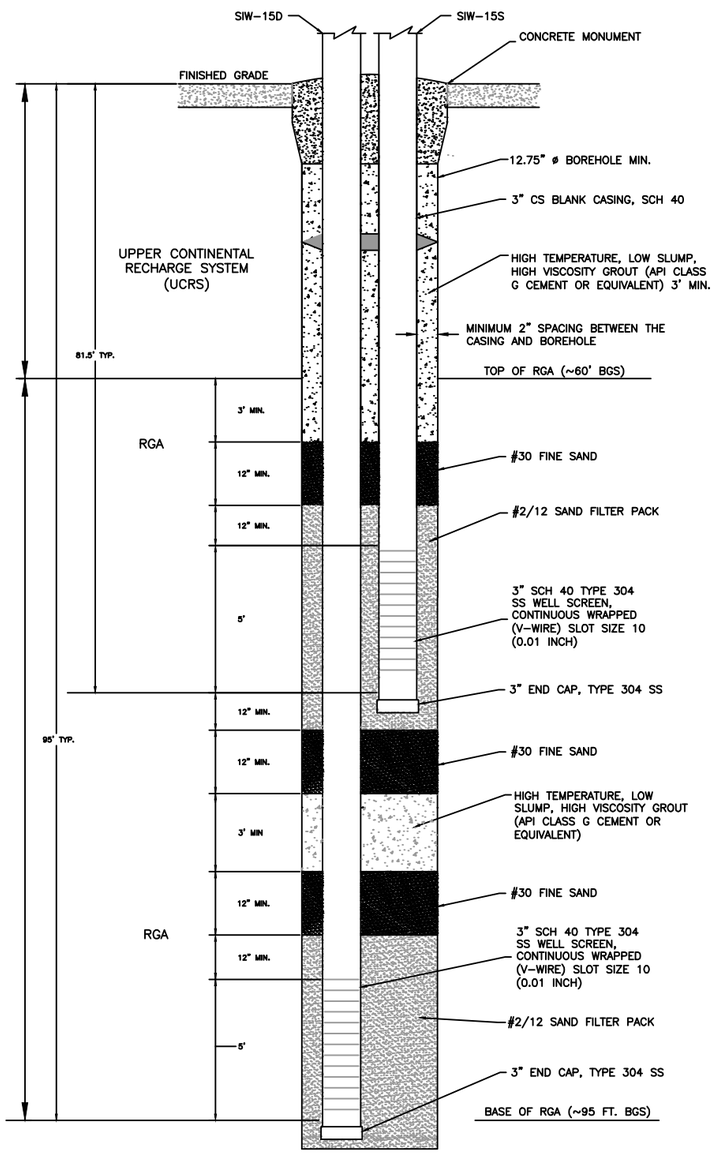

NESTED STEAM INJECTION WELL (TYP.)
NOT TO SCALE

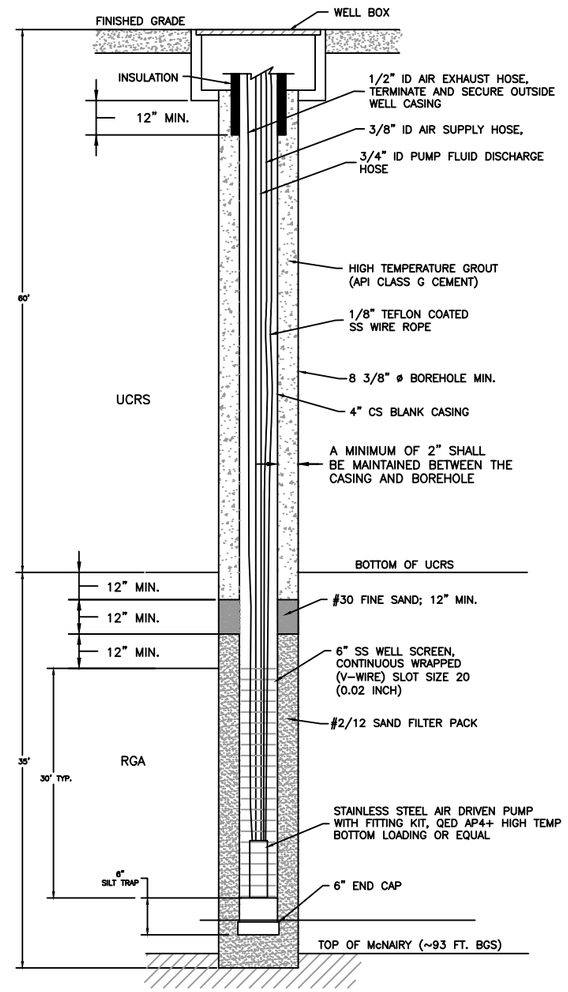

DEEP DUAL PHASE EXTRACTION (DPE) WELL (TYP.)
NOT TO SCALE

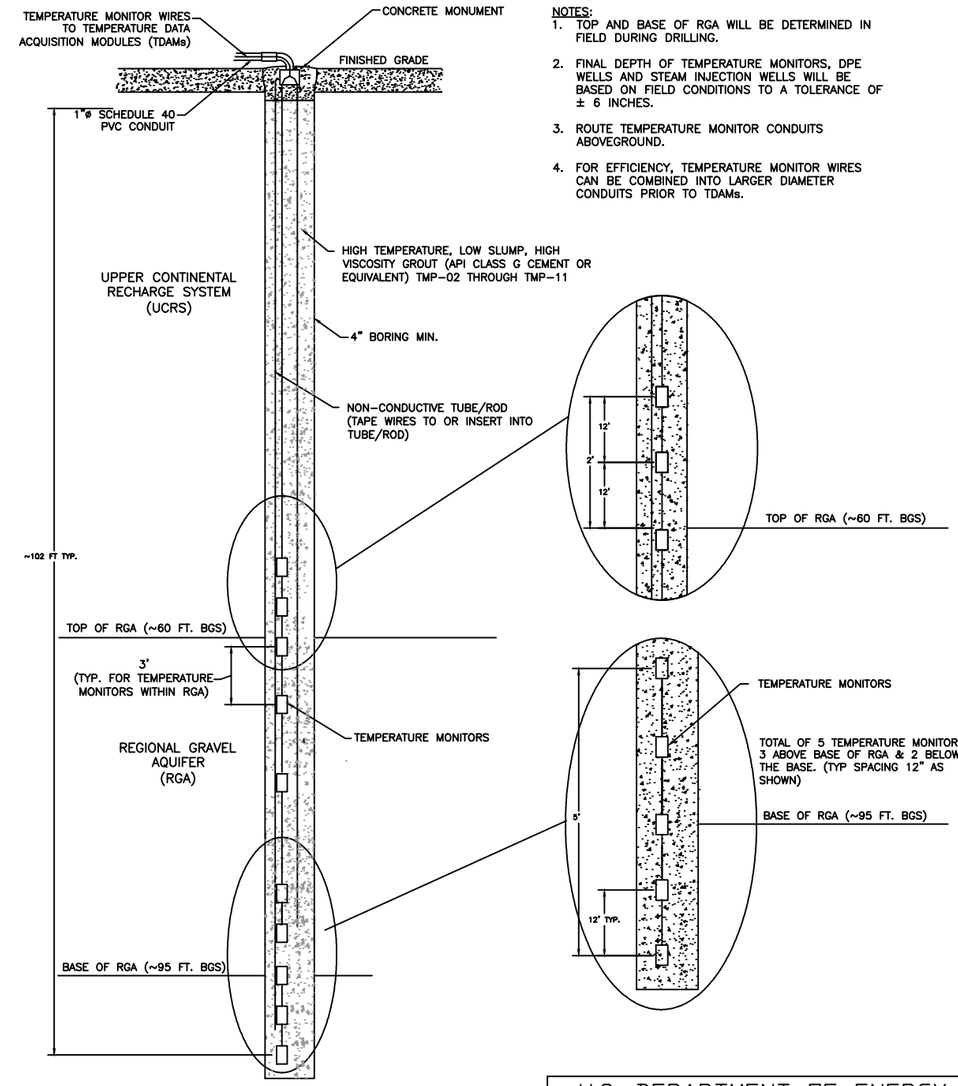

TEMPERATURE MONITORING POINT (TYP.)
(TMP-12 THROUGH TMP-33)
NOT TO SCALE

NOTES:
1. TOP AND BASE OF RGA WILL BE DETERMINED IN FIELD DURING DRILLING.
2. FINAL DEPTH OF TEMPERATURE MONITORS, DPE WELLS AND STEAM INJECTION WELLS WILL BE BASED ON FIELD CONDITIONS TO A TOLERANCE OF ± 6 INCHES.
3. ROUTE TEMPERATURE MONITOR CONDUITS ABOVEGROUND.
4. FOR EFFICIENCY, TEMPERATURE MONITOR WIRES CAN BE COMBINED INTO LARGER DIAMETER CONDUITS PRIOR TO TDAMs.

LPE											
DATE	REV.	DATE	DESCRIPTION	DRAWN BY	DRAFT CHK	PROJ ENGR	LEAD ENGR	CONF CTRL/ NUCL SFTY	FAC MGR	EATS MGR	
PROFESSIONAL SEAL	DRAWING REVISIONS										

U.S. DEPARTMENT OF ENERGY
DOE PORTSMOUTH/PADUCAH PROJECT OFFICE
PADUCAH GASEOUS DIFFUSION PLANT

FLUOR. PADUCAH DEACTIVATION PROJECT
DOE Prime Contract #DE-DT0007774

ERM Environmental Resources Management

DOE CONTRACT NO. DT-000-7774

PROJECT NAME:
C-400 STEAM INJECTION TREATABILITY STUDY

TITLE:
TREATABILITY STUDY
STEAM INJECTION AND DPE WELLS AND TEMPERATURE MONITORING POINTS

CAD FILE NAME	BUILDING	PLANT	CLASS
H:\PROJECTS\PGDP\C400\TSP FILE - Copy to G:\T-1 FORMS\DOE FILES\TS 9-3-15\M5E-FA1530-A04 TS.dwg	C-400	PGDP	U
SCALE: N. T. S.	DRAWING NUMBER M5E-FA1530-A04		REV FA1